TMG INDUSTRIAL

TMG-TYM9
PRODUCT MANUAL
v.2026.11.16

9' (2.85m) Dual-Disc Orchard Mower



⚠ WARNING



Please read and understand the product manual completely before assembly
- Check the parts list to make sure all parts are received.
- Wear safety goggles or other protective gear while assembling.
- Do not return products to dealers, who are not equipped to handle returns.

Missing parts or questions about assembly?
Email: cs@tmgindustrial.com
Or visit: tmgindustrial.com

Table of Contents

1. Product Specifications 2

1.1 Features and Specifications 2

2. Safety Instructions 3

2.1 Safety First 3

2.2 General Safety 3

2.3 Storage Safety 4

2.4 Maintenance Safety 4

3. Operation 5

3.1 Installation 5

3.2 General Operation 5

3.3 Stopping 6

4. Maintenance 7

4.1 Service 7

4.2 Maintenance 7

4.3 Storage 9

5. Exploded View and Parts List 10

1. Product Specifications

1.1 Features and Specifications

Features

- Compatible with 3-point hitch CAT 1&2 tractors, 40-90 HP
- Wide 9' cutting width maximizes mowing efficiency
- Dual 24" guide cutting discs reach around trees and obstacles
- Ten hardened alloy steel blades deliver durable cutting performance
- Cut grass and vegetation up to 3/8" diameter
- Adjustable 1"-2.5" cutting height suits varying orchard conditions
- Rear support wheels help maintain stable, uniform cutting height
- Protective chain curtains help contain debris during mowing
- Ideal for orchards, vineyards, tree farms, and row maintenance

Specifications

Model	TMG-TYM9
Tractor power	40-90 HP
Hitch type	3-point CAT 1 & 2
PTO speed	540 RPM
Working width	9' (2850 mm)
Max. cutting diameter	3/8" (10 mm)
Cutting height	1"-2.5" (20-60 mm)
Number of guide cutting disc	2
Cutting disc diameter	24" (613 mm)
Number of blades	10
Blade material	Hardened alloy steel
Hydraulic Pressure	2,000-3,000 PSI (14-21 MPa)
Hydraulic flow	5-15 GPM (19-57 L/min)
Gearbox oil	GL-5 85W-90
Weight	882 lb (401 kg)

2. Safety Instructions

⚠ Before operating the TMG-TYM9 mower, read the following safety instructions. Failure to comply with these warnings may result in serious injury or death.

CONGRATULATIONS! On the purchase of your new TMG-TYM9 Dual-Disc Orchard Mower. This information is to assist you in preparing, operating and maintaining your mower. Please read and understand the information completely before operating your mower, paying special attention to all the safety details. Keep this manual handy for a ready reference.

2.1 Safety First

YOU are responsible for the SAFE operation and maintenance of your mower. YOU must ensure that you and anyone else who is going to operate, maintain or work around the mower is familiar with the operating and maintenance procedures and related SAFETY information contained in this manual. This manual will take you step-by-step through your working day and alert you to all good safety practices that should be followed while operating the mower.

Remember, YOU are the key to safety. Good safety practices not only protect you but also the people around you. Make these practices a working part of your safety program. Be certain that EVERYONE operating this equipment is familiar with the recommended operating and maintenance procedures and follows all the safety precautions. Most accidents can be prevented. Do not risk injury or death by ignoring good safety practices.

1. Mower owners must give operating instructions to operators or employees before allowing them to operate the machine.
2. The most important safety feature on this equipment is a SAFE operator. It is the operator's responsibility to read and understand ALL Safety and Operating instructions in the manual and to follow these. Most accidents can be prevented.
3. A person who has not read and understood all operating and safety instructions is not qualified to operate the machine. An untrained operator exposes himself and bystanders to possible serious injury or death.
4. Do not modify the equipment in any way. Unauthorized modification may weaken the function and/or safety and could affect the life of the equipment.
5. Think SAFETY! Work SAFELY!

2.2 General Safety

1. Wear hearing protection when operating the mower.
2. Ensure the PTO horsepower and three-point hitch lifting capacity of the tractor match the requirements of the mower; refer to the tractor operator's manual for safe working loads, including any counterweight that may be required to balance the weight of the mower.
3. Do not operate the mower without all the tractor and mower safety shields in place.
4. Never operate the tractor and mower until you have read and completely understand the Safety and Operator's Manual, and each of the safety decals attached to the tractor and mower.
5. Check the gearbox oil level and safety clutch adjustment before using the mower.
6. Before mowing, clear the area to be cut of stones, branches, or other debris that might be thrown by the mower, causing injury or damage.
7. Before operating the mower, inspect the area to be cut to ensure that you are familiar with the ground conditions and in particular any obstacles that may be partially hidden.
8. Keep all people and animals at a safe distance from moving parts and blade-thrown debris.
9. Use caution when changing direction on hills. Avoid high speed, steep slopes, sharp turns, sudden braking and rough terrain.
10. If working under rough conditions with a hitch-mounted mower fitted with a rigid tower, a chain or other flexible top link can be used to allow the mower to follow the terrain independently of the tractor.

11. Before dismounting from the tractor, or allowing any person to approach the mower, disengage the PTO, switch off the engine, apply the parking brake, and ensure the mower blades have stopped rotating.
12. Never allow any person to ride on the mower when the machine is operating.
13. Always operate the mower from the tractor seat.
14. Never clear grass or dirt away from the mower while it is operating.
15. Ensure the tractor engine is switched off and the parking brake is applied before performing any inspection or maintenance on the mower.
16. Never use alcoholic beverages or drugs which can hinder alertness or coordination while operating this equipment. Consult your doctor about operating this machine while taking prescription medications.
17. Review the safety instructions with all users annually.
18. Ensure maintenance is carried out regularly by a qualified person. Pay particular attention to the PTO shaft, safety guards, cutter bar, and blades.

2.3 Storage Safety

1. Store the machine in an area away from human activity.
2. Do not permit children to play on or around the stored machine.
3. Store the machine in a dry, level area.
4. Clean grease and oil as required and protect it from the elements.

2.4 Maintenance Safety

1. Good maintenance is your responsibility. Poor maintenance is an invitation to trouble.
2. Follow good shop practices.
3. Keep the service area clean and dry.
4. Be sure electrical outlets and tools are properly grounded.
5. Use adequate light for the job at hand.
6. Make sure there is plenty of ventilation. Never operate the engine in a closed building. The exhaust fumes may cause asphyxiation.
7. Before working on this machine, shut off the engine, set the brakes, and remove the ignition key.
8. Never work under raised equipment unless it is supported by adequate safety stands or equivalent mechanical supports.
9. Use personal protective equipment such as eye, hand, and hearing protection when performing any service or maintenance work. Wear heavy gloves when handling blades.
10. Only use genuine parts for service and maintenance.
11. A fire extinguisher and first aid kit should be kept readily accessible while performing maintenance on this equipment.
12. Periodically tighten all bolts, nuts and screws and check that all pins are properly installed to ensure the unit is in a safe condition.
13. When completing a maintenance or service function, make sure all safety shields and devices are installed before placing the machine in service.

3. Operation

3.1 Installation

Line up the lower hitch arms with the hitch pins of the mower, slide the hitch arms onto the pins and secure with a Lynch pin. Attach the top link to the mower. Raise the mower from the ground and adjust the stabilizer bars or chains to allow minimal sideways movement.

To disconnect the mower, lower the mower to the ground and reverse the above procedure.

Check the length of the PTO shaft before connecting it to the tractor by raising the mower to a position where the shaft would be horizontal when connected. If the shaft is too long, it will need to be cut before it is connected. Make sure there is sufficient clearance to allow installation of the mower PTO shaft to the tractor PTO stub.

PTO Telescoping Shaft Measurements

PTO clearance: Attach the mower to the tractor leaving the PTO shaft detached. Raise the mower so that the gearbox input shaft is level with the tractor's PTO output stub. This gives the shortest distance between the tractor PTO output stub and the mower input stub. The telescoping PTO shaft must be able to retract to a length at least 30–50 mm shorter than this distance, measured between the PTO lock-out pin and the lock-out pin groove on the tractor's output stub. This ensures the PTO shaft cannot bottom out, causing damage to the tractor or implement.

PTO drive overlap: Lower the mower to the ground in an operating position. Slide the PTO telescoping shaft apart and attach the coupling ends to the appropriate input and output stub. Ensure the lock-out pins are engaged. Hold the unattached shaft ends parallel together. Ensure there is at least 100–150 mm overlap of the two metal shafts. Clean and grease the shafts and slide them back together. If you are in any doubt about any of the above, contact your place of purchase..

Connecting the PTO Shaft: Before attaching the PTO shaft to the tractor, ensure it is the correct length; not too long or too short. Clean and grease the splines on the tractor and mower PTO stub shafts and install the PTO shaft, making sure that the spring-loaded locking pins engage in the retaining grooves of the stub shafts. Ensure that the PTO shaft guards are secure and operable.

Caution: Depending on the model, it may be possible to raise the mower too high, which will cause the PTO shaft to contact the mower body. Raise the mower very slowly to check whether this happens and, if so, set the upper lift limit of the tractor hydraulics to avoid contact. Contact may cause the PTO shaft to bend and require replacement. Do not rely on memory to avoid lifting the mower too high and damaging the PTO shaft.

The PTO shaft can be removed from the mower. The clutch end of the PTO shaft is fixed in the groove on the mower input shaft with a bolt and nylon lock nut. The PTO shaft can be removed from, or fitted to, the tractor by depressing the quick-release pin..

All mowers are fitted with an adjustable clutch in the PTO driveline. This allows the rotor to slip under heavy load. The clutch is factory set and should not need adjustment under normal use. After prolonged disuse or weathering, the slip clutch should be inspected, maintained, and adjusted to ensure its correct operation.

With the mower on the ground, adjust the chain top link so the front of the mower lifts slightly above the rear. Then raise the mower very slowly, making sure that the PTO drive shaft shield does not hit the front of the mower. If it does, the drive shaft shield will be damaged and, if it hits hard enough, the drive shaft itself will also be damaged, making replacement necessary.

3.2 General Operation

Cutting Height Adjustment: The cutting height can be set by lifting the mower, loosening the bolts and nuts attaching the adjustable skids and repositioning the skid plates to the required height. When adjusting the skids, ensure the entire wear surface touches the ground to avoid uneven wear. Achieve this by adjusting the mower attitude with the tractor top link. After adjusting the skids, retighten the attaching bolts and nuts securely.

Caution: Disengage the PTO, stop the tractor engine, and support the mower on stands before adjusting the skid height.

Under heavy cutting conditions, it is advantageous to set the rear of the mower about 25 mm (1 in) higher than the front. This ensures that the material will only be cut once. If the mower is lower at the rear, the material will be cut a second time by the rear arc of the blades and will require considerably more power.

Mower Operation: Before starting to mow, check the area to be cleared to ensure that you are familiar with the ground conditions and that there are no dangerous hazards. This is especially important on land that has not been cut by you before, such as vacant lots, roadsides, channels, and drains that can hold hidden hazards.

Dual Clutch: Once all safety procedures have been followed, start the tractor and raise the mower approximately 200 mm (7.9 in) above the ground and engage the PTO at low engine speed. Slowly increase engine speed to reach 540 RPM at the PTO and edge slowly forward while lowering the mower. To minimize wear on both tractor and mower, maintain the PTO speed at 540 RPM. Lower speeds cause excessive wear, especially to blades and bolts, because the lower centrifugal force allows the blades to move on the bolts continuously.

Single Clutch: Tractors fitted with a single-stage clutch will need an over-running clutch fitted in the PTO drive train. The mower and tractor will begin moving at the same time. Once all safety procedures have been followed, start the tractor and raise the mower approximately 200 mm (7.9 in) above the ground. Select the appropriate transmission gear and engage the 540 RPM PTO speed. Release the clutch and increase engine speed to achieve 540 RPM at the PTO. Lower the mower onto its skids to begin mowing. To minimize wear on both tractor and mower, maintain the PTO speed at 540 RPM. Lower speeds cause excessive wear, especially to blades and bolts, because the lower centrifugal force allows the blades to move on the bolts continuously.

If the cutting load is very heavy and the tractor has difficulty handling it, take a narrower cut, which requires less power.

3.3 Stopping

Slow engine speed to idle and disengage the PTO shaft. Lower the mower, switch off the tractor engine, and apply the parking brake.

4. Maintenance

4.1 Service

4.1.1 Fluids and Lubricants

1. Grease: use multi-purpose lithium-based grease.
2. Gearbox oil: use GL-5 85W-90 gear oil.
3. Storing lubricants: your machine can operate at top efficiency only if clean lubricants are used. Use clean containers to handle all lubricants. Store them in an area protected from dust, moisture and other contaminants.

4.1.2 Greasing

1. Use a hand-held grease gun for all greasing.
2. Wipe the grease nipple with a clean cloth before greasing, to avoid injecting dirt and grit.
3. Replace and repair broken nipples immediately.
4. If nipples will not take grease, remove and clean thoroughly. Also clean the lubricant passageway. Replace the nipple if necessary.

4.2 Maintenance

The recommended period is based on normal operating conditions. Severe or unusual conditions may require more frequent maintenance.

4.2.1 8 Hours or Daily Maintenance

1. Check and tighten all nuts and bolts at connection points.
2. Check the oil in the gearbox. Fill up to the line if necessary.
3. Pump grease into each grease nipple three to five times.
4. Clean the implement; remove all grass and mud.

4.2.2 Season Maintenance

1. Perform the same checks as listed in daily maintenance.
2. Check the oil in the gearbox; replace it if it is contaminated.
3. Check the bearings of the blade spindles for wear and tear. If worn, disassemble, clean and replace them if necessary, and grease as required.
4. Check the bearing and gear clearances. Adjust them if necessary.

4.2.3 Annual Maintenance

1. Thoroughly clean the mower of mud and grass.
2. Drain the gearbox and clean it thoroughly. Fill with new gear oil to the specified oil level.
3. Check and clean the blade axles. Replace the oil seals and grease them.
4. Check all blades; replace them if they are worn out or damaged.
5. Repair the side skirts and restore them to their original technical condition. Replace damaged or broken protective devices.
6. Remove the drive shaft from the machine. Pull the PTO shaft apart. Check and replace any components that are damaged or worn. Install the PTO shaft on the machine. The PTO shaft should telescope easily and the guard should turn freely on the shaft.

Maintenance item	8 hrs / Daily	40 hrs / Weekly	Annually
Lubricate PTO Shaft	✓	✓	✓
Lubricate Jockey Wheels	✓	✓	✓
Lubricate Blade Spindle	✓	✓	✓
Check Gear Box Oil Level		✓	✓
Clean Machine			✓
Lubricate and Clean PTO Shaft Cover			✓

4.2.4 PTO Shaft Maintenance

The PTO shaft is designed to telescope to allow for dimensional changes as the machine goes through its operating range. A tubular guard encloses the driving components and is designed to remain stationary on a turning shaft when required. The shaft should telescope easily and the guard should turn freely on the shaft at all times. Annual disassembly, cleaning and lubrication is recommended to ensure that all components function as intended. To maintain the shaft, follow this procedure:

1. Remove the shaft from the machine.
2. Pull the shaft apart.
3. Use a screwdriver to pry the tabs out of the sleeves on each end. There are three tabs per guard.
4. Pull the shaft out of the plastic tubular guard.
5. Use a solvent to clean the male and female portions of the telescoping ends.
6. Apply a light coat of grease to each end.
7. Clean the grooves on each end where the tabs are located. Clean each tab also.
8. Apply a light coat of grease to each groove.
9. Insert the shaft into its respective guard and align the slots with the groove.
10. Insert the tabs through the slots and seat them in the groove.
11. Check that each guard turns freely on the shaft.
12. Assemble the shaft.
13. Check that the shaft telescopes easily.
14. Replace any components that are damaged or worn.
15. Install the shaft on the machine.

4.2.5 Gearbox Maintenance

The gearbox used on the mower will give many years of trouble-free service with minimal maintenance requirements. Maintain the gearbox by following this procedure:

Oil level:

- Remove the level plug from the rear or side of the gearbox.
- Add oil through the filler plug located on top of the gearbox until oil comes out of the level plug.
- Add oil through the fill plug if required.
- If the gearbox has a dipstick on the filler plug, then fill to the indicator mark.

IMPORTANT: Check the oil level only when the unit is cold and the machine is on level ground.

4.3 Storage

After the season's use, the machine should be thoroughly inspected and prepared for storage. Repair or replace any worn or damaged components to prevent any unnecessary downtime at the start of the next season. To ensure a long, trouble-free life, follow the procedure outlined below:

1. Thoroughly wash the machine using a pressure washer to remove all dirt, mud, debris and residue.
2. Inspect the blades and rotor for damage or entangled material. Repair or replace damaged parts. Remove all entangled material.
3. Lubricate all grease nipples. Make sure that all grease cavities have been filled with grease to remove any water residue from the inside.
4. Touch up all paint nicks and scratches to prevent rusting.
5. Move the machine to the storage area.
6. Select an area that is dry, level and free of debris.
7. Unhook from the tractor (see Section 3.1).
8. If the machine cannot be placed inside, cover it with a waterproof tarpaulin and tie it securely in place.

Store the machine in an area away from human activity. Do not allow children to play on or around the stored machine.

5. Exploded View and Parts List

Diagram A-Main Assembly

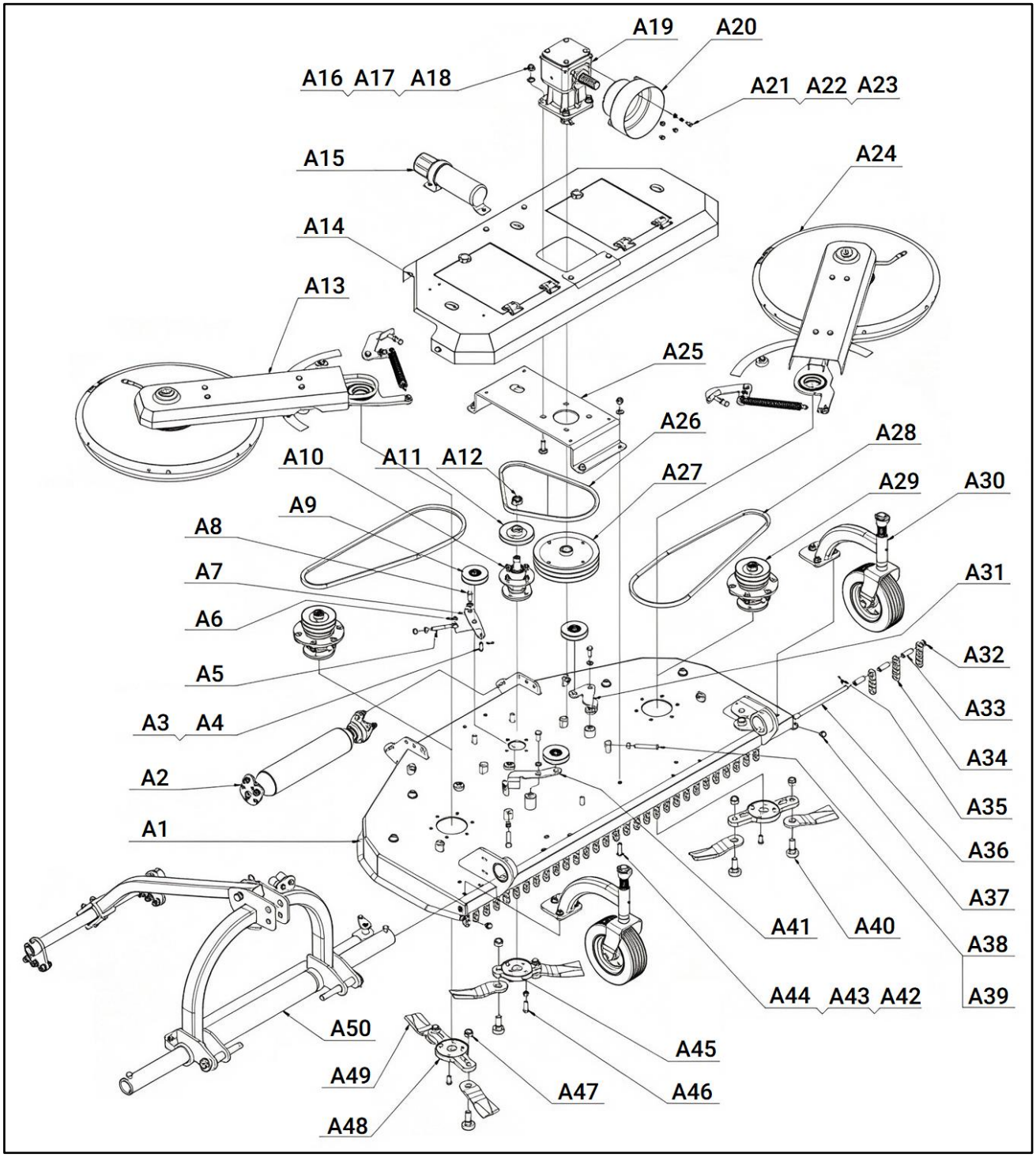

No.	Specification	Qty	Remark
A1	Housing Cover Weldment	1	
A2	Roller Assembly	1	
A3	Cotter Pin 3.2×18	1	
A4	Clevis Pin 10×32	1	
A5	Eye Bolt M12×90	1	Thread length ≥50
A6	Flat Washer 10	1	
A7	Mid-plate Tensioner Bracket	1	
A8	Full Thread Bolt M12×30	11	
A9	Tension Pulley Assembly	3	
A10	Intermediate Cutter Spindle Assembly	1	
A11	Intermediate Pulley Weldment	1	
A12	Lock Nut M24×1.5×18	1	
A13	Right Side Panel Assembly	1	
A14	Pulley Guard Assembly	1	
A15	Instruction Manual	1	
A16	Button Head Bolt M16×45	4	
A17	Flat Washer 16	4	
A18	Hex Lock Nut M16	4	
A19	Gear Box	1	Standard component
A20	Drive Shaft Guard	1	
A21	Full Thread Bolt M8×16	4	
A22	Spring Washer 8	4	
A23	Flat Washer 8	4	
A24	Left Side Panel Assembly	1	
A25	Transmission Housing Weldment	1	
A26	V-Belt B1120Li	1	
A27	Large Pulley Weldment	1	
A28	V-Belt B1626Li	2	
A29	Lateral Blade Shaft Assembly	2	
A30	Ground Wheel Assembly	2	
A31	Left Tensioner Bracket	1	
A32	Flat Washer 12	6	
A33	Sleeve	32	
A34	Chain Assembly (Ø 8 chain link × 3 links)	33	
A35	Cotter Pin	1	
A36	Pin Rod	1	
A37	Plug	2	
A38	Full Thread Bolt M12×80	2	
A39	Hex Nut M12	8	
A40	M20 Cut Bolt	6	
A41	Right Tensioner Bracket	1	
A42	Flat Washer 14	8	

No.	Specification	Qty	Remark
A43	Hex Lock Nut M14	4	
A44	Full Thread Bolt M14×45	4	
A45	Intermediate Cutter	1	
A46	Full Thread Bolt M12×40	4	
A47	Hex Lock Nut M20	6	
A48	Side Turntable Weldment	2	
A49	Hay Knife	6	
A50-1	Suspension Assembly	1	Optional: select one of the two configurations
A50-2	Hydraulic Side Shift Suspension Assembly	1	

Diagram B-Drum Assembly

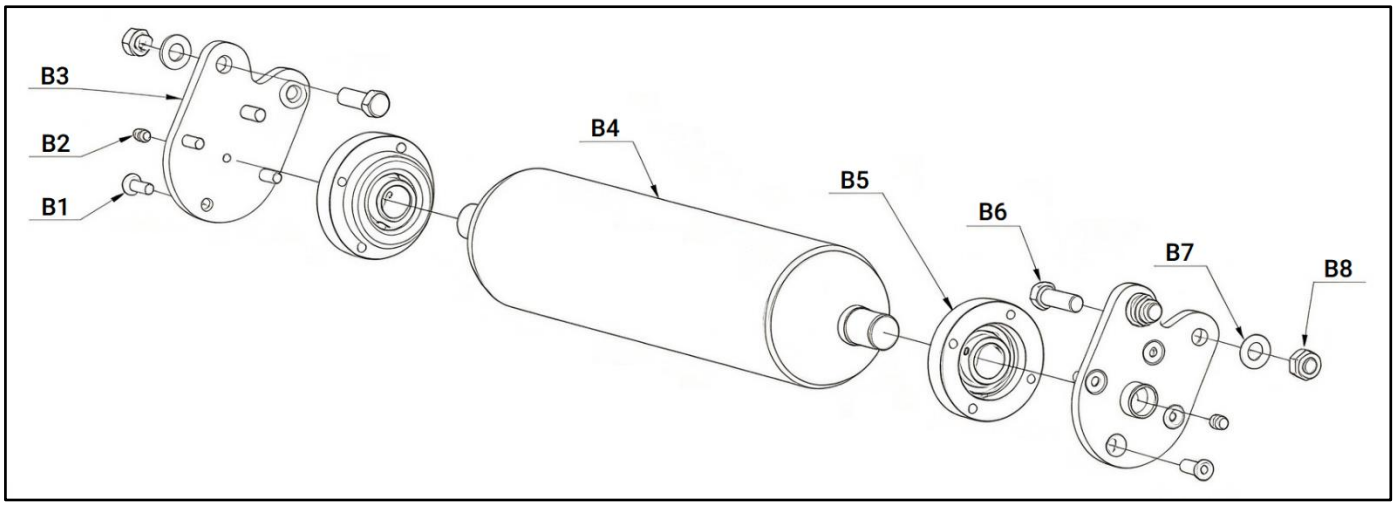

No.	Specification	Qty	Remark
B1	Screw M8×25	8	
B2	Grease Fitting M8×1	2	With a dust cover
B3	Roller Plate Weldment	2	
B4	Roller Weldment	1	
B5	Flange Bearing UC205	2	
B6	Full Thread Bolt M12×40	4	
B7	Flat Washer 12	4	
B8	Hex Lock Nut M12	4	

Diagram C-Tensioned Pulley Assembly

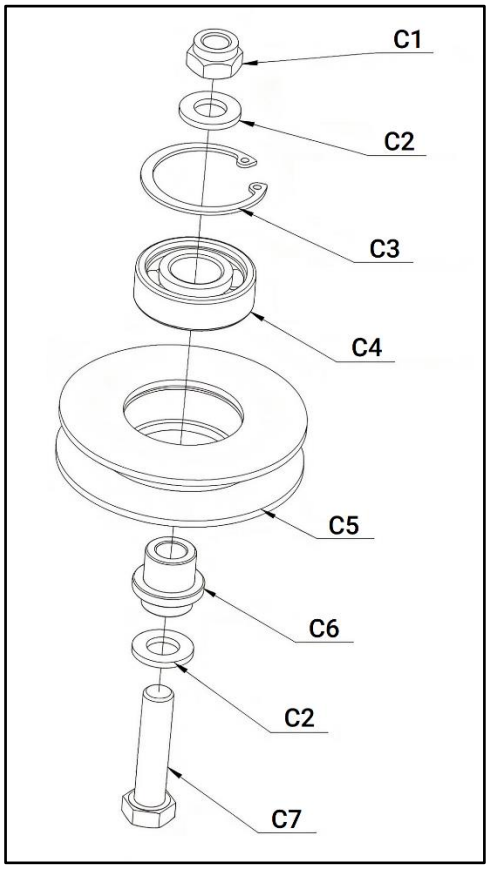

No.	Specification	Qty	Remark
C1	Hex Lock Nut M12	1	
C2	Flat Washer 12	2	
C3	Type A Internal Retaining Ring	1	
C4	Deep Groove Ball Bearing 6204	1	
C5	Idler Pulley	1	
C6	Tension Spacer	1	
C7	Half Thread Bolt M12×50	1	

Diagram D-Intermediate Tool Shaft Assembly

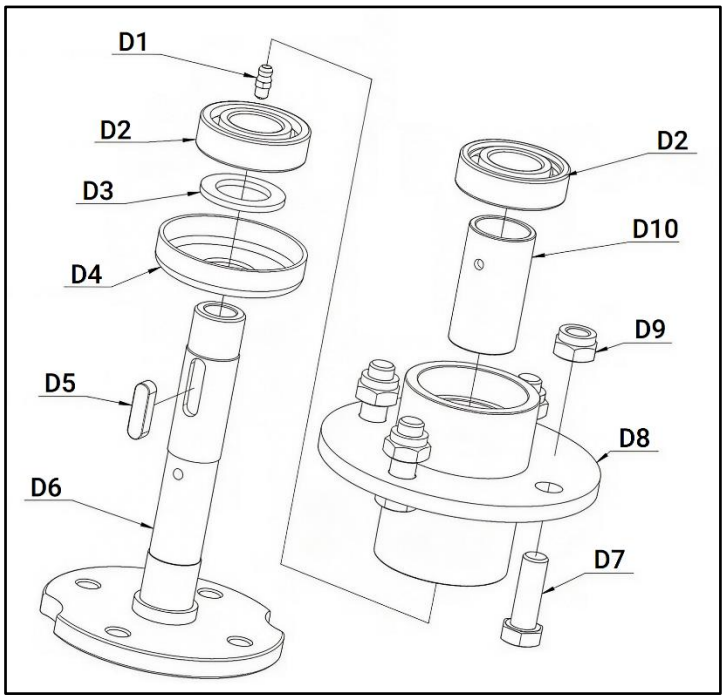

No.	Specification	Qty	Remark
D1	Grease Cup M6	1	
D2	Deep Groove Ball Bearing 6206	2	
D3	Shim 45×31×3	1	
D4	Shield	1	
D5	Type A Flat Key 8×7×28	1	
D6	Intermediate Spindle Weldment	1	
D7	Full Thread Bolt M12×35	4	
D8	Intermediate Spindle Seat Weldment	1	
D9	Hex Lock Nut M12	4	
D10	Intermediate Cutter Shaft Spacer	1	

Diagram E-Left & Right Disk Assembly

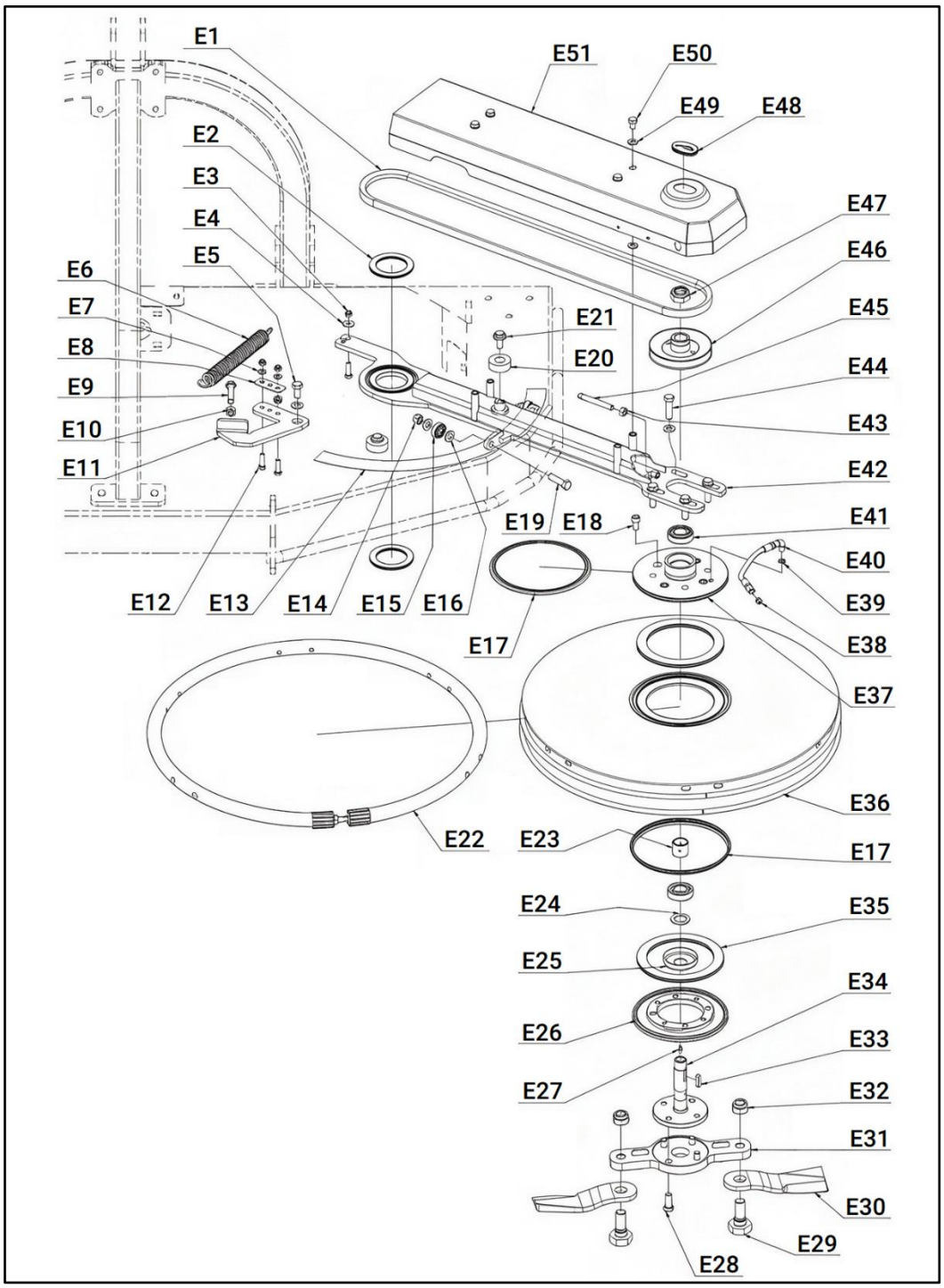

No.	Specification	Qty	Remark
E1	V-Belt B1800Li	1	
E2	Thrust Roller and Retainer Assembly	2	
E3	Hex Lock Nut M8	3	
E4	Large Flat Washer 8	2	
E5	Full Thread Bolt M12×25	1	
E6	Side Plate Return Spring	1	
E7	Flat Washer 8	5	
E8	Spring Retaining Plate	1	
E9	Full Thread Bolt M12×60	1	
E10	Hex Nut M12	1	
E11	Right Side Tension Spring Seat	1	
	Left Side Tension Spring Seat	1	
E12	Full Thread Bolt M8×30	3	
E13	Block	1	
E14	Hex Lock Nut M12	2	
E15	Deep Groove Ball Bearing	2	
E16	Flat Washer 12	9	
E17	Seal Strip 8×6×4	2	0.65 m and 0.66 m, one of each
E18	Hexagon Socket Head Cap Screw M10×20	4	
E19	Half Thread Bolt M12×45	2	
E20	Nylon Sleeve	2	
E21	Hexagon Flange Bolt M12×25	2	
E22	Buffer Ring Assembly	1	
E23	Lateral Cutter Spindle Spacer	1	
E24	Shim 45×31×3	1	
E25	Shield	1	
E26	Side Plate Bearing Cover	1	
E27	Grease Cup M6	1	
E28	Full Thread Bolt M12×30	4	
E29	M20 Cut Bolt	2	
E30	Hay Knife	2	
E31	Side Turntable Weldment	1	
E32	Hex Lock Nut M20	2	
E33	Type A Flat Key 8×7×28	1	
E34	Side Blade Shaft Weldment	1	
E35	Thrust Roller and Retainer Assembly	2	
E36	Side Panel Cover Weldment	1	
E37	Side Plate Knife Holder Weldment	1	
E38	Oil Cup G1/8	1	
E39	Fine-Thread Hex Nut M10×1	1	
E40	Hydraulic Hose Assembly	1	

No.	Specification	Qty	Remark
E41	Deep Groove Ball Bearing	2	
E42	Right Side Swing Arm Weldment	1	
	Left Side Swing Arm Weldment	1	
E43	Hex Nut M10	1	
E44	Full Thread Bolt M12×45	4	
E45	Set Screw M10×75	1	
E46	Intermediate Pulley Weldment	1	
E47	Lock Nut M24×1.5×18	1	
E48	U-Guard Cover	1	
E49	Flat Washer 10	8	
E50	Full Thread Bolt M10×20	4	
E51	Side Belt Guard	1	

Diagram F-Belt Pulley Cover Assembly

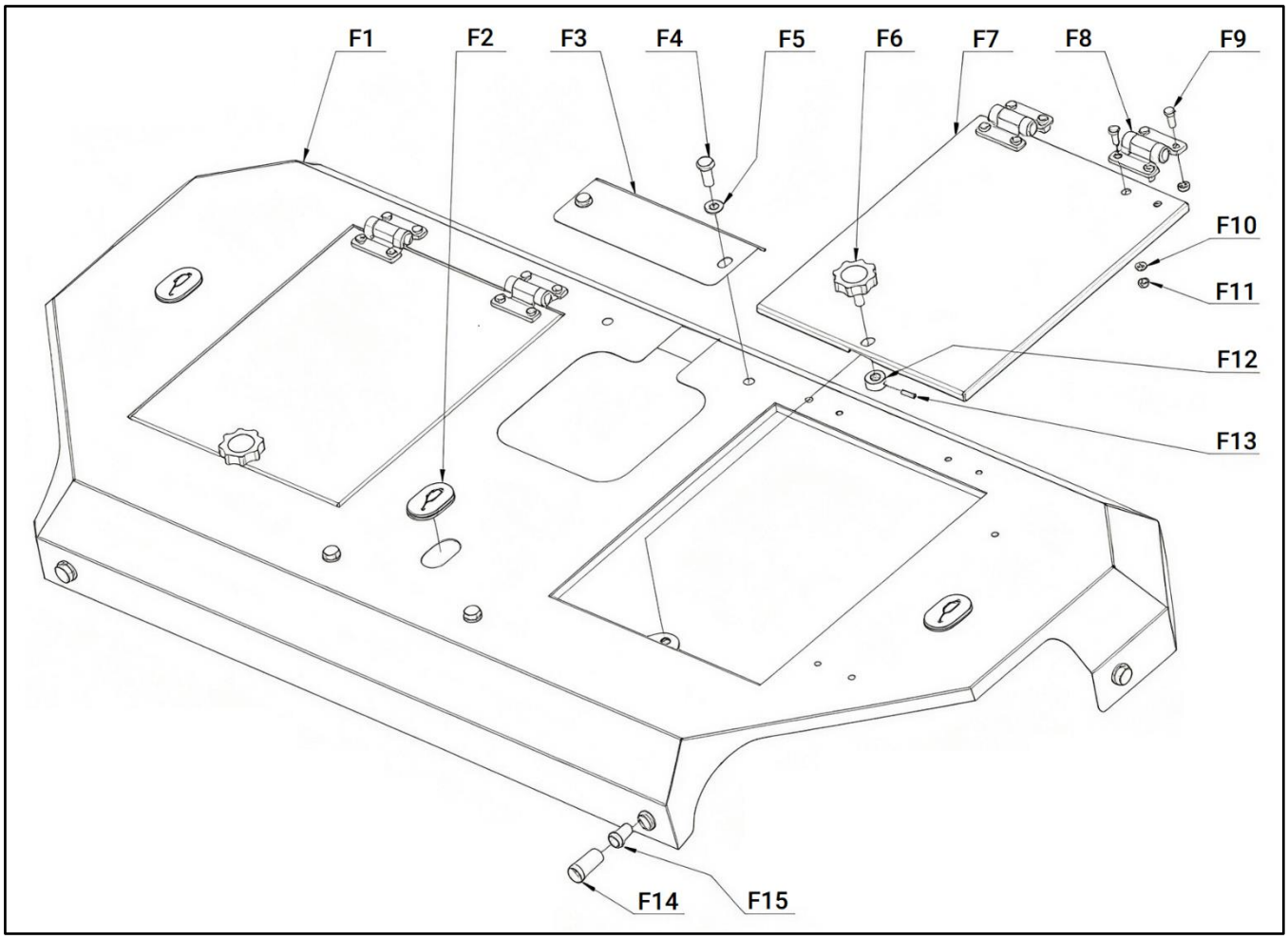

No.	Specification	Qty	Remark
F1	Belt Guard Weldment	1	
F2	U-Cover	3	
F3	Blind Flange	1	
F4	Full Thread Bolt M10×25	4	
F5	Flat Washer 10	4	
F6	Handle	2	
F7	Inspection Cover	2	
F8	Hinge	4	
F9	Full Thread Bolt M6×16	16	
F10	Flat Washer 6	8	
F11	Hex Lock Nut M6	16	
F12	Set Collar	2	
F13	Spring-Type Straight Pin 3.5×18	2	
F14	Full Thread Bolt M12×30	4	
F15	Flat Washer 12	4	

Diagram G-Side Cutter Shaft Assembly

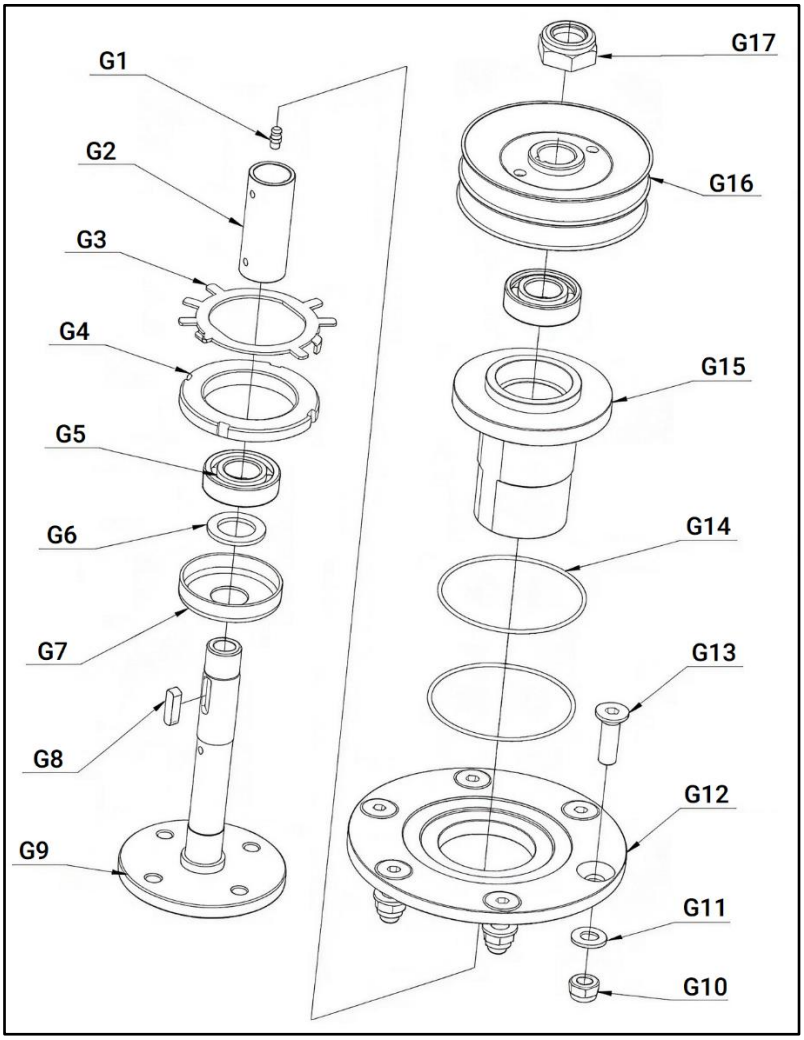

No.	Specification	Qty	Remark
G1	Grease Cup M6	1	
G2	Lateral Blade Shaft Spacer	1	
G3	Lock Washer	1	
G4	Round Nut M75×2	1	
G5	Deep Groove Ball Bearing 6206	2	
G6	Shim 45×31×3	1	
G7	Shield	1	
G8	Type A Flat Key 8×7×28	1	
G9	Side Blade Shaft Weldment	1	
G10	Hex Lock Nut M12	6	
G11	Flat Washer 12	6	
G12	Side Cutter Spindle Flange	1	
G13	Hexagon Socket Head Screw M12×40	6	
G14	O-Ring 106×2.65	2	
G15	Lateral Blade Spindle Seat	1	
G16	Small Pulley Weldment	1	
G17	Lock Nut M24×1.5×18	1	

Diagram H-Ground Wheel Assembly

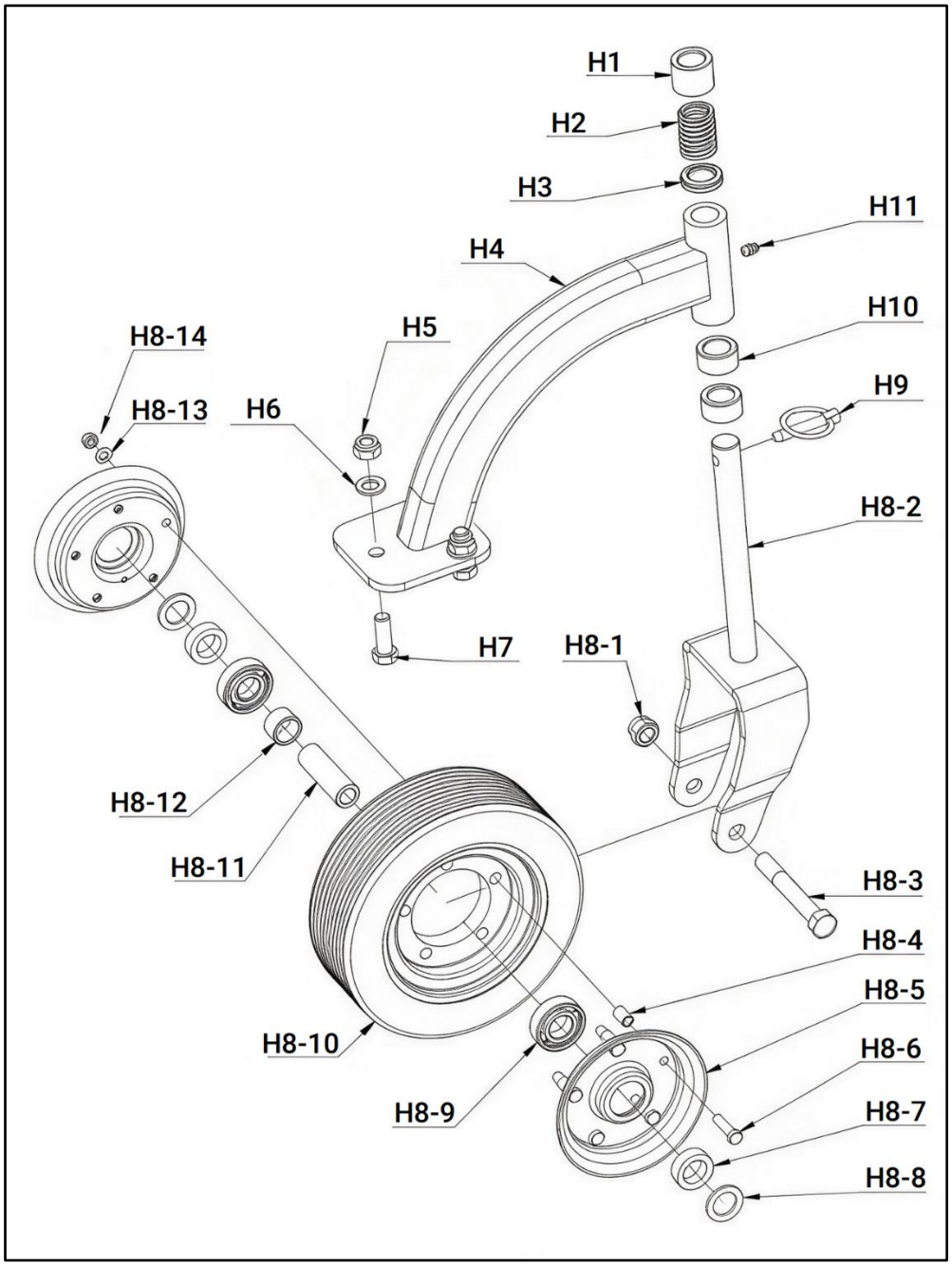

No.	Specification	Qty	Remark
H1	Adjustment Ring (H=32)	1	
H2	Compression Spring	1	
H3	Adjustment Ring (H=6)	1	
H4	Ground Wheel Frame Weldment	1	
H5	Hex Lock Nut M14	3	
H6	Flat Washer 14	3	
H7	Full Thread Bolt M14×40	3	
H8	Fork & Wheel Assembly	1	
H8-1	Hex Lock Nut M16	1	
H8-2	Fork and Wheel Weldment	1	
H8-3	Half Thread Bolt M16×120	1	
H8-4	Bushing	5	
H8-5	Steel Ring	2	
H8-6	Full Thread Bolt M8×35	5	
H8-7	Nylon Sleeve	2	
H8-8	Gasket 38×25.5×2.5	2	
H8-9	Deep Groove Ball Bearing 6205	2	
H8-10	Rubber Wheel (4.10/3.5-4)	1	
H8-11	Drive Pipe	1	
H8-12	Sleeve	1	
H8-13	Flat Washer 8	5	
H8-14	Hex Lock Nut M8	5	
H9	Latch Assembly	1	
H10	Adjustment Ring (H=20)	2	
H11	Oil Cup M8×1	1	With a dust cover

Diagram J-Suspension Assembly

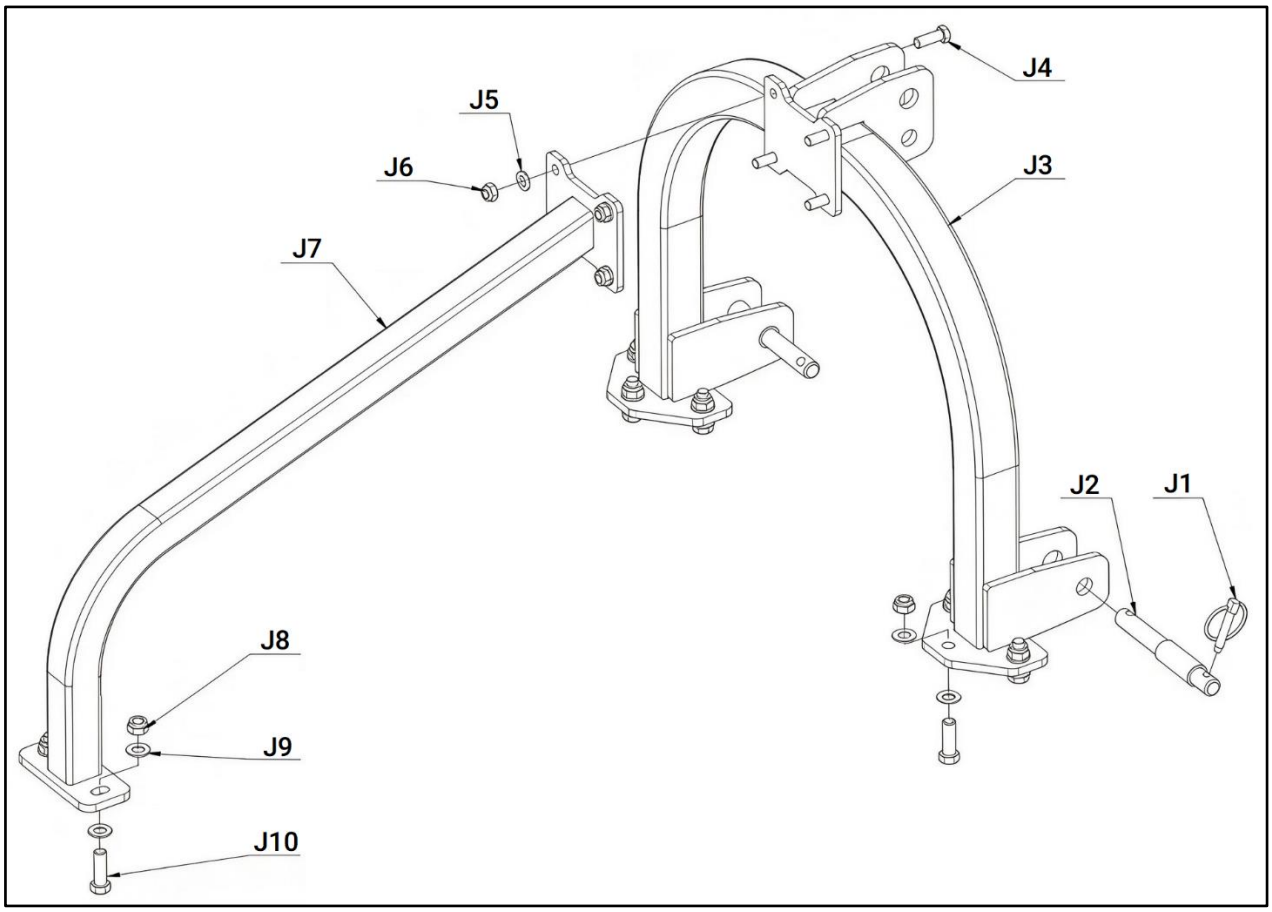

No.	Specification	Qty	Remark
J1	Latch Assembly	2	
J2	Suspension Pin	2	
J3	Suspension Frame Weldment	1	
J4	Full Thread Bolt M12×35	4	
J5	Flat Washer 12	4	
J6	Hex Lock Nut M12	4	
J7	Suspension Bar Weldment	1	
J8	Hex Lock Nut M14	8	
J9	Flat Washer 14	16	
J10	Full Thread Bolt M14×45	8	

Diagram K-Hydraulic Side-shift Suspension Assembly

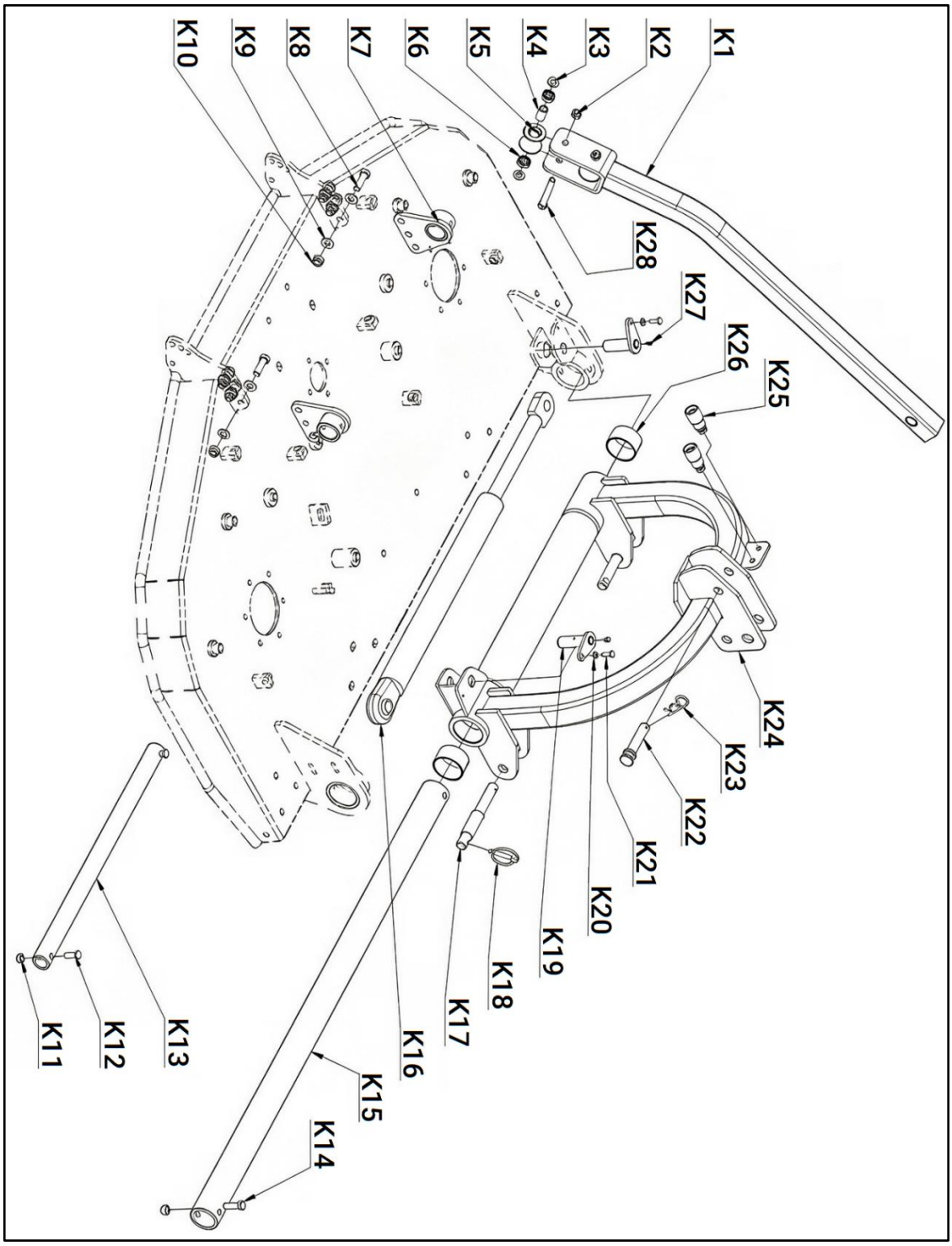

No.	Specification	Qty	Remark
K1	Suspension Bar Weldment	1	
K2	Hex Lock Nut M12	4	
K3	Flat Washer 12	4	
K4	Guide Pulley Spacer	2	
K5	Guide Roller	2	
K6	Deep Groove Ball Bearing 6001	4	
K7	Suspended Guide Rail Support	2	
K8	Full Thread Bolt M14×45	6	
K9	Flat Washer 14	12	
K10	Hex Lock Nut M14	6	
K11	Hex Lock Nut M10	2	
K12	Full Thread Bolt M10×30	2	
K13	Short Guide Rail Shaft (L=700)	1	
K14	Full Thread Bolt M12×40	2	
K15	Long Guide Rail Shaft (L=1400)	1	
K16	Hydraulic Cylinder	1	
K17	Suspension Pin	2	
K18	Latch Assembly	2	
K19	MH Lock Rivet Fastener	2	
K20	Flat Washer 8	2	
K21	Full Thread Bolt M8×20	2	
K22	Connecting Pin 2	1	
K23	R-Shackle, Large	1	
K24	Suspension Weldment	1	
K25	Fixed Bracket Assembly	2	
K26	Self-lubricating Bearing SF-2-65×70×40	2	
K27	Grease Cup M6	2	
K28	Half Thread Bolt M12×90	2	

WARRANTY INFORMATION:
Please refer to our website for detailed warranty conditions and coverage.
For the most up-to-date and comprehensive warranty information, visit **www.tmgindustrial.com**