TMG INDUSTRIAL

TMG-TSL18/22
PRODUCT MANUAL
v.2026.11.10

18 / 22 Ton Log Splitter



⚠ WARNING



Please read and understand the product manual completely before assembly
- Check the parts list to make sure all parts are received.
- Wear safety goggles or other protective gear while assembling.
- Do not return products to dealers, who are not equipped to handle returns.

Missing parts or questions about assembly?
Email: cs@tmgindustrial.com
Or visit: tmgindustrial.com

Table of Contents

1. Product Specifications 2

2. Safety Instructions 3

2.1 Safety First 3

2.2 General Safety 3

2.3 Operating Safety 4

2.4 Storage Safety 4

2.5 Maintenance Safety 4

3. Operation 6

3.1 Checking Before Operating 6

3.2 Assembly and Mounting 6

3.3 Field operation 6

3.4 Transporting 6

4. Service and Maintenance 7

4.1 Service 7

4.2 Maintenance 7

4.3 Storage 7

5. Exploded View and Parts List 9

1. Product Specifications

Implement Specifications

Model	TSL18	TSL22
Tractor HP	20-50 HP	20-50 HP
3-Point Linkage	Cat-1	Cat-1
PTO speed	540 rpm	540 rpm
Splitting Force	18 ton	22 ton
Cycle Time	6 seconds	6 seconds
Operation	Vertical and Horizontal	Vertical and Horizontal
Max Log Length	27.5" (700 mm)	27.5" (700 mm)
Max log diameter	12" (300 mm)	12" (300 mm)
Hydraulic Pressure	14-21 MPa (2,000-3,000 PSI)	14-21 MPa (2,000-3,000 PSI)
Hydraulic flow	5-15 GPM (19-57 L/min)	5-15 GPM (19-57 L/min)
Hydraulic hose	G 1/2" (2 pcs)	G 1/2" (2 pcs)
Hydraulic coupler	1/2" Pioneer-style quick coupler (2 pcs)	1/2" Pioneer-style quick coupler (2 pcs)

Features:

- Compatible with 20-50 HP tractors for versatile splitting applications
- Delivers powerful 18- or 22-ton splitting force for demanding log processing
- Operates vertically or horizontally for convenient, flexible log handling
- Fast cycle time helps maximize splitting productivity and efficiency
- Handles logs up to 27.5” long and 12” in diameter
- Hydraulic system operates at 2,000–3,000 PSI with 5-15 GPM flow
- Equipped with G 1/2" hydraulic hoses and Pioneer-style quick couplers

2. Safety Instructions

⚠ Before operating the Log Splitter, read the following safety instructions.
Failure to comply with these warnings may result in serious injury or death.

CONGRATULATIONS! On the purchase of your new TMG log splitter. This information is to assist you in preparing, operating and maintaining your log splitter. Please read and understand the information completely before operating your log splitter, paying special attention to all the safety details. Keep this manual handy for a ready reference.

2.1 Safety First

YOU are responsible for the SAFE operation and maintenance of your Log splitter. YOU must ensure that you and anyone else who is going to operate, maintain or work around the Log splitter is familiar with the operating and maintenance procedures and related SAFETY information contained in this manual. This manual will take you step-by-step through your working day and alert you to all good safety practices that should be adhered to while operating the Log splitter.

Remember, YOU are the key to safety. Good safety practices not only protect you but also the people around you. Make these practices a working part of your safety program. Be certain that EVERYONE operating this equipment is familiar with the recommended operating and maintenance procedures and follows all the safety precautions. Most accidents can be prevented. Do not risk injury or death by ignoring good safety practices.

1. Log splitter owners must give operating instructions to operators or employees before allowing them to operate the machine.
2. The most important safety feature on this equipment is a SAFE operator. It is the operator's responsibility to read and understand ALL Safety and Operating instructions in the manual and to follow these. Most accidents can be avoided.
3. A person who has not read and understood all operating and safety instructions is not qualified to operate the machine. An untrained operator jeopardizes the operator and bystanders by exposing them to possible serious injury or death.
4. Do not modify the equipment in any way. Unauthorized modification may weaken the function and/or safety and could affect the life of the equipment.
5. Think SAFETY! Work SAFELY!

2.2 General Safety

1. Read the operator's Manual and all safety signs carefully before operating, maintaining, adjusting or removing the Log splitter.
2. Operate only at safe distance from bystanders. Clear the area of people, especially small children, before starting.
3. Never split wood in wet or slippery conditions.
4. Never stand on, straddle, or climb over the log splitter at any time.
5. Keep all shields in place. If shield removal becomes necessary for repairs, replace the shield prior to use.
6. Always retract the ram and uncouple the log splitter from the hydraulic remotes before moving, adjusting, servicing, or removing any debris.
7. Review safety related items annually with all personnel who will operate or maintain the Log splitter.
8. Do not operate machine if you feel unwell or physically unfit, in which case you should stop working.
9. This machine was designed with safety very much in mind. However, there is no real substitute for caution and attention in preventing accidents. Once an accident has happened, it is too late to think about what you should have done.
10. Never exceed the limits of a piece of machinery. If its ability to do a job, or to do so safely, is in question – DON'T TRY IT.

11. Do not repair a hydraulic leak while it is under pressure; oil at high pressure can penetrate the skin and cause severe injury.

2.3 Operating Safety

The Log splitter must be operated safely to prevent or minimize the risk of minor or moderate injury. Unsafe operation can create a number of hazards for you. Always take the following precautions when operating this log splitter:

1. Keep in mind that the operator or user is responsible for accidents or hazards occurring to other people, their property, and themselves.
2. Wear long pants while splitting wood.
3. Always cut the ends of the log you are splitting as squarely as possible.
4. Never split more than one log at a time unless the ram has been fully extended and a second log is needed to complete the split of the first log.
5. Never put anything between the log guiding plates and the side of a log; logs spread as they are forced against the wedge.
6. Never operate the ram in a stalled position for more than 5 seconds. The hydraulic fluid may overheat and damage the machine. If the wood being split is excessively hard, stop the machine, rotate the log 90° and try again. If you still cannot split the log, reject the log as it exceeds the capacity of the machine.
7. Never leave the log splitter unattended. If you leave the area, lower the ram, shut off the tractor, and disconnect the hydraulic couplers.
8. Clean up as you work; accumulated split wood and wood chips can create a hazardous work environment.
9. Always check the alignment of moving parts and for damaged or worn parts.
10. Keep all nuts and bolts tight and keep the equipment and attachments in good operating condition.
11. Review safety instructions with all operators annually.

2.4 Storage Safety

1. Store the machine in an area away from human activity.
2. Do not permit children to play on or around the stored machine.
3. Store the machine in a dry, level area.
4. Clean grease and oil as required and protect it from the elements.

2.5 Maintenance Safety

1. Good maintenance is your responsibility. Poor maintenance is an invitation to trouble.
2. Follow good shop practices.
3. Keep service area clean and dry.
4. Be sure electrical outlets and tools are properly grounded.
5. Use adequate light for the job at hand.
6. Make sure there is plenty of ventilation. Never operate the engine in a closed building. The exhaust fumes may cause asphyxiation.
7. Before working on this machine, shut off the engine, set the brakes, and remove the ignition key.

8. Never work under equipment unless it is secured by a mechanical stand.
9. Use personal protection devices such as eye, hand and hearing protectors, when performing any service or maintenance work.
10. Always release residual energy from pressurized hydraulic fluid and allow the fluid to cool before doing any maintenance or repair work on the log splitter.
11. Never use your hand or any part of your body to check for hydraulic system leaks while the system is pressurized.
12. Never remove the fill/dipstick cap from the hydraulic fluid port while the hydraulic circuit is live or while the tank is still warm after operation. Hot pressurized fluid can cause serious injury, so wait for the hydraulic tank to cool before removing the cap.
13. The log splitter must be on a level surface.
14. Get professional medical help at once if hydraulic oil penetrates anyone's skin.
15. Never adjust the hydraulic system.
16. Only use genuine parts for service and maintenance.
17. A fire extinguisher and first aid kit should be kept readily accessible while performing maintenance on this equipment.
18. Periodically tighten all bolts, nuts and screws and check that all pins are properly installed to ensure the unit is in a safe condition.
19. When completing a maintenance or service function, make sure all safety shields and devices are installed before placing the machine in service.

3. Operation

3.1 Checking Before Operating

The Log splitter will fit most Category 1 tractors equipped with a standard 3-point hitch. The pins need to be installed to the inside of the 3-point frame for use with Category 1 tractors. This implement is designed for use on tractors equipped with remote hydraulics.

Check the tractor’s 3-point hydraulic lift system. It should operate up and down smoothly and hold its position when set. Refer to your tractor owner’s manual or dealer for any adjustments necessary to put the 3-point hydraulic lift system in good working order. The tractor should be equipped with stabilizer bars, adjustable sway chains, or sway blocks to keep the implement from swinging side to side. Smaller tractors may need front counterweights to counterbalance the weight of the implement.

3.2 Assembly and Mounting

1. Lower the hydraulic linkage arms using the position control. Note: It may be necessary to add weight to the three-point hitch to lower the lift arms.
2. Back the tractor at low speed towards the implement and adjust the lower links to the proper level.
3. Stop the tractor, set the park brake, remove the ignition key and wait for all moving parts to stop before dismounting.
4. Connect the tractor's lower links to the implement's left and right lower suspension brackets and install the pins. Connect the top link to the implement's top-link bracket and install the pin.
5. Connect hydraulic couplers to tractor remotes, use the three-point hitch to raise the machine from the ground before moving the machine.
6. Reverse the above procedure when removing the machine from the tractor.

3.3 Field operation

1. Position the Log Splitter on solid level ground when operating.
2. Apply the tractor brake securely and put the transmission into Park / Neutral.
3. Use the control lever to select the direction of movement.
4. Operate the ram to lift the wedge above the height of the log to be split.
5. Position the center of the log under the wedge. Move the wedge until contact is made with the log.
6. Keep two hands on the control levers while splitting the log. The speed can be controlled by how much pressure you put on the control valve.
7. Stop splitting if the log starts to go sideways and reposition it per the above instructions.
8. Should the wedge lodge or become stuck in the log, return the wedge to the fully open position and gently rock the log free before continuing.

3.4 Transporting

When transporting the machine, review and follow these instructions:

1. Be sure that the machine is securely attached to the tractor and all retainer pins are installed.
2. Be sure you have installed extra weights on the front of the tractor.
3. Be sure you are in compliance with all applicable lighting and marking regulations when transporting.

4. Be sure your machine can be seen clearly by overtaking and oncoming traffic.
5. Do not allow riders.
6. Always use hazard flashers on the tractor when transporting.

4. Service and Maintenance

4.1 Service

4.1.1 Fluids and lubricants

1. Grease: Use multi-purpose lithium-based grease.
2. Hydraulic Oil: Use SAE 10W-30 hydraulic oil.
3. Storing Lubricants: Your machine can operate at top efficiency only if clean lubricants are used. Use clean containers to handle all lubricants. Store them in an area protected from dust, moisture and other contaminants.

4.1.2 Greasing

1. Use a hand-held grease gun for all greasing.
2. Wipe the frame slide clean before greasing.

4.2 Maintenance

The recommended period is based on normal operating conditions. Severe or unusual conditions may require more frequent maintenance.

4.2.1 8 Hours or Daily Maintenance

1. Check and tighten all nuts and bolts in connection parts.
2. Pump grease onto the frame side as required.
3. Clean the implement; take away all dirt, debris and residue.

4.2.2 Season Maintenance

1. Check the machine as above for daily maintenance.
2. Check the hydraulic oil; replace it if it is contaminated.
3. Check the limiting block for wear and tear. If worn, disassemble, clean and replace it if necessary.
4. Check the hydraulic hoses and couplings, and replace them if required.

4.2.3 Annual Maintenance

1. Thoroughly clean the log splitter from debris and residue.
2. Check the splitting wedge and sharpen it if required. (Just use a file; it does not need a razor-sharp edge.).
3. Apply a thin coating of oil or grease to the wedge cutting edge to prevent rust.

4.3 Storage

After the season's use, the machine should be thoroughly inspected and prepared for storage. Repair or replace any worn or damaged components to prevent any unnecessary downtime at the start of next season. To ensure a long, trouble-free life, follow the procedure outlined below:

1. Thoroughly wash the machine using a pressure washer to remove all dirt, mud, debris and residue.
2. Inspect the splitting wedge and ram for damage or entangled material. Repair or replace damaged parts. Remove all entangled material.
3. Coat all exposed cylinder shafts with a corrosion preventive.
4. Touch up all paint nicks and scratches to prevent rusting.
5. Move to the storage area.
6. Select an area that is dry, level and free of debris.
7. Unhook from the tractor.
8. If the machine cannot be placed inside, cover it with a waterproof tarpaulin and tie it securely in place.

Store the machine in an area away from human activity. Do not allow children to play on or around the stored machine.

5. Exploded View and Parts List

Diagram A-TSL18 Log Splitter Assembly

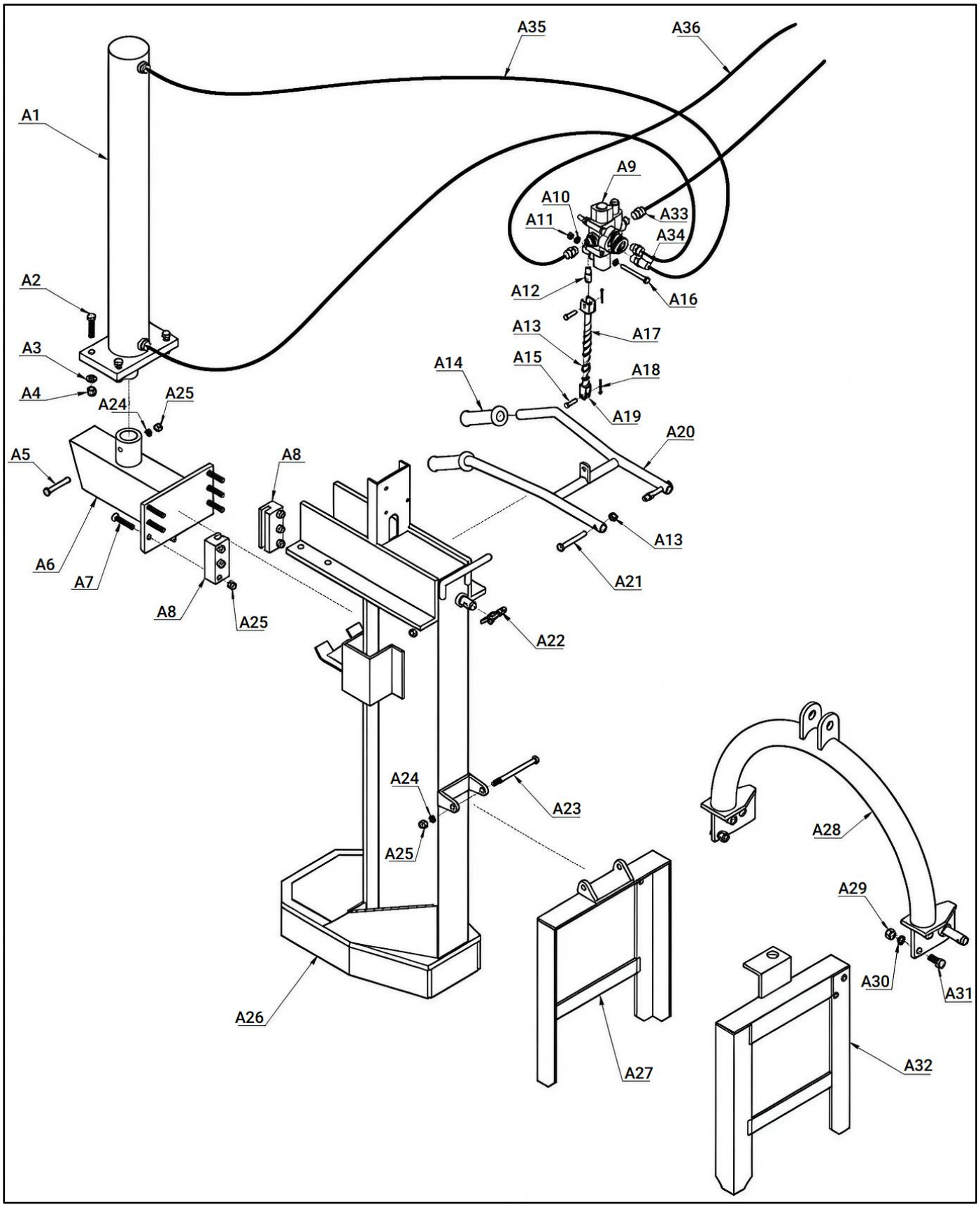

No.	Specification	Qty
A1	Hydraulic cylinder	1
A2	Full-thread bolt M12×50	4
A3	Plain washer 12	4
A4	Lock nut M12	4
A5	Half-thread bolt M10×70	1
A6	Splitting wedge weldment	1
A7	Countersunk screw M10×60	6
A8	Slide block	2
A9	Single-spool directional control valve	1
A10	Plain washer 8	6
A11	Lock nut M8	3
A12	Driving lever	1
A13	Nut M10	3
A14	Handle grip cover	2
A15	Lock pin 8×30	2
A16	Half-thread bolt M8×80	3
A17	Tie rod weldment	1
A18	Cotter pin 3×20	2
A19	Joint block	1
A20	Joystick weldment	1
A21	Half-thread bolt M10×80	2
A22	Lock pin assembly	1
A23	Half-thread bolt M10×140	1
A24	Plain washer 10	2
A25	Lock nut M10	8
A26	Rack weldment	1
A27	Left bracket weldment	1
A28	Hitch frame weldment	1
A29	Nut M14	4
A30	Spring washer 14	4
A31	Full-thread bolt M14×30	4
A32	Right bracket weldment	1
A33	Hydraulic hose fitting	3
A34	Long hydraulic hose fitting	1
A35	Cylinder inlet/return hose	2
A36	Control valve hose	2

Diagram B-TSL22 Log Splitter Assembly

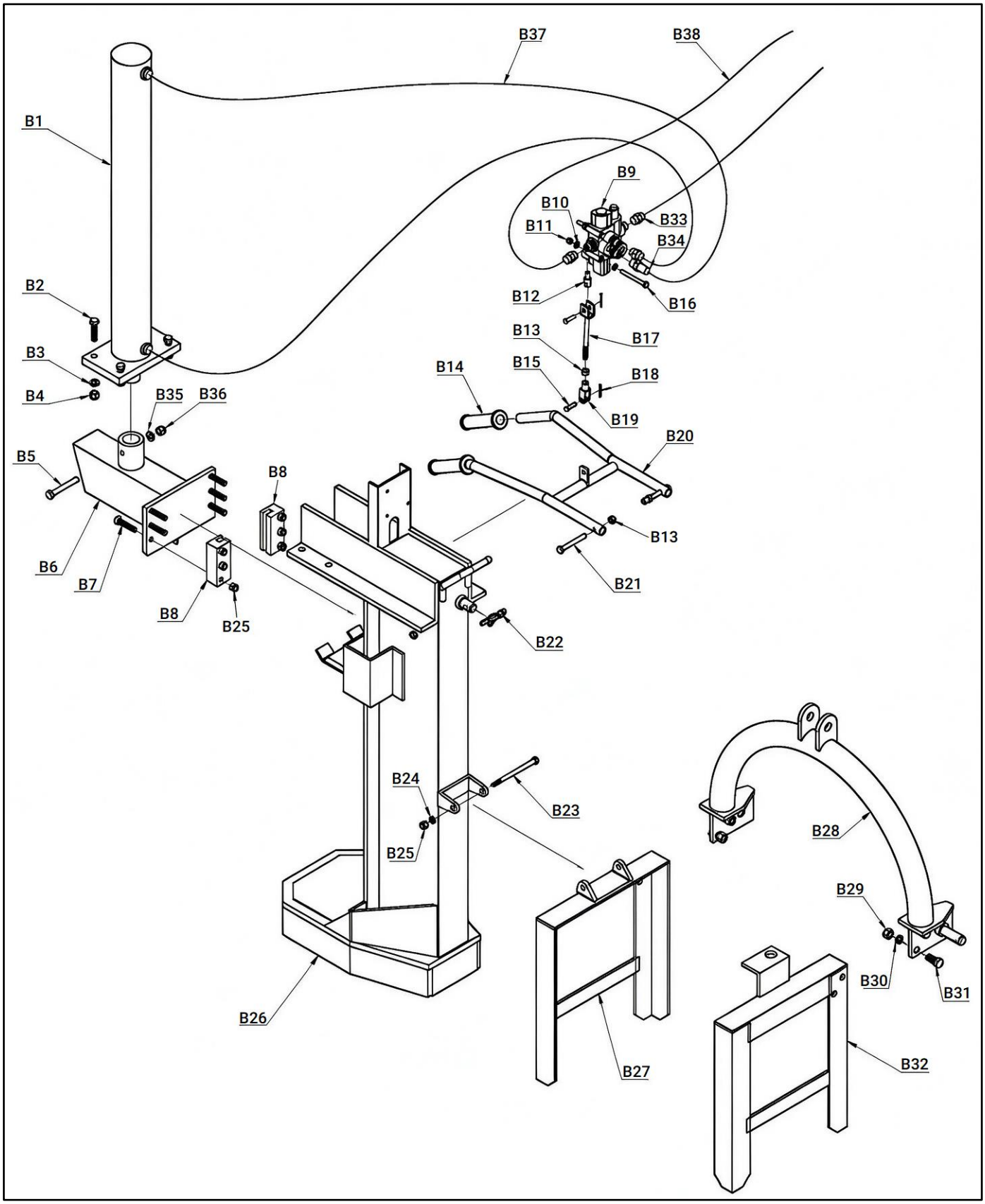

No.	Specification	Qty
B1	Hydraulic cylinder	1
B2	Bolt M14×50	4
B3	Plain Washer 14	4
B4	Lock Nut M14	4
B5	Hex Bolt M12×85	1
B6	Splitting wedge weldment	1
B7	Countersunk Screw M10×60	6
B8	Slide block	2
B9	Single-spool directional control valve	1
B10	Plain Washer 8	6
B11	Lock Nut M8	3
B12	Driving lever	1
B13	Nut M10	3
B14	Handle grip cover	2
B15	Pin Shaft 8×30	2
B16	Hex Bolt M8×80	3
B17	Tie rod weldment	1
B18	Cotter Pin 3×20	2
B19	Joint Block	1
B20	Joystick weldment	1
B21	Hex Bolt M10×80	2
B22	Lock Pin Assembly	1
B23	Bolt M10×140	1
B24	Plain Washer 10	1
B25	Lock Nut M10	7
B26	Rack Weldment	1
B27	Left bracket weldment	1
B28	Hitch frame weldment	1
B29	Nut M14	4
B30	Spring Washer 14	4
B31	Bolt M14×30	4
B32	Right bracket weldment	1
B33	Hydraulic hose fitting	3
B34	Long hydraulic hose fitting	1
B35	Plain Washer 12	1
B36	Lock Nut M12	1
B37	Cylinder inlet/return hose	2
B38	Control valve hose	2

WARRANTY INFORMATION: Please refer to our website for detailed warranty conditions and coverage.
For the most up-to-date and comprehensive warranty information, visit **www.tmgindustrial.com**