TMG INDUSTRIAL®

TMG-TBD48/60/72
PRODUCT MANUAL
v.2026.11.25

48"(1.2m) / 60"(1.5m) / 72"(1.8m) 3PT Snow Blower



⚠ WARNING



Please read and understand the product manual completely before assembly
- Check the parts list to make sure all parts are received.
- Wear safety goggles or other protective gear while assembling.
- Do not return products to dealers, who are not equipped to handle returns.

Missing parts or questions about assembly?
Email: cs@tmgindustrial.com
Or visit: tmgindustrial.com

Table of Contents

1. Important Safety Information 2

2. Introduction 5

3. Assembly and Set-up 6

4. Operating Instructions 16

5. Adjustments 17

6. Maintenance and Lubrication 18

7. Specifications & Capacities 20

8. Troubleshooting 21

9. Appendix 22

10. Exploded View and Parts List 24

1. Important Safety Information

Safety always

Thoroughly read and understand the instructions given in this manual before operation. Refer to the “Safety Decal”, read all instructions noted on them.

Do not allow anyone to operate this equipment who has not fully read and comprehended this manual and who has not been properly trained in the safe operation of the equipment.

Operator should be familiar with all functions of the unit. Operate implement from the driver’s seat only.

Make sure all guards and shields are in place and secured before operating the implement.

Do not leave tractor or implement unattended with engine running.

Dismounting from a moving tractor could cause serious injury or death.

Do not stand between tractor and implement during hitching.

Keep hands, feet, and clothing away from power-driven parts.

Wear snug fitting clothing to avoid entanglement with moving parts.

Watch out for wires, trees, etc., when raising implement. Make sure all persons are clear of working area.

Turning tractor too tight may cause implement to ride up on wheels. This could result in injury or equipment damage.

Look For the Safety Alert Symbol

The SAFETY ALERT SYMBOL indicates there is a potential hazard to personal safety involved and extra safety precaution must be taken. When you see this symbol, be alert and carefully read the message that follows it. In addition to design and configuration of equipment, hazard control and accident prevention are dependent upon the awareness, concern, prudence, and proper training of personnel involved in the operation, transport, maintenance and storage of equipment.

Be aware of signal words

A signal word designates a degree or level of hazard seriousness. The signal words are:



DANGER

Indicates an imminently hazardous situation which, if not avoided, will result in death or serious injury. This signal word is limited to the most extreme situations, typically for machine components that, for functional purpose, cannot be guarded.



WARNING

Indicates a potentially hazardous situation which, if not avoided, could result in death or serious injury, and includes hazards that are exposed when guards are removed. It may also be used to alert against unsafe practices.



CAUTION

Indicates a potentially hazardous situation which, if not avoided, may result in minor or moderate injury. It may also be used to alert against unsafe practices.

For your protection

Thoroughly read and understand the “safety label” section, read all instructions noted on them.

Shut down and storage

Lower machine to ground, put tractor in park, turn off engine, and remove the ignition key.

Detach and store implements in an area where children normally do not play. Secure implement by using blocks and supports.

Use safety lights and devices

Slow moving tractors, self-propelled equipment, and towed implements can create a hazard when driven on public roads. They are difficult to see, especially at night.

Flashing warning lights and turn signals are recommended whenever driving on public roads. Use lights and devices provided with implement.

Transport machinery safely

Comply with state and local laws.

Maximum transport speed for implement is 20 mph. Do not exceed. Never travel at a speed which does not allow adequate control of steering and stopping. Some rough terrain requires a slower speed.

Sudden braking can cause a towed load to swerve and upset. Reduce speed if towed load is not equipped with brakes.

Use the following maximum speed - tow load weight ratios as a guideline:

20 mph when weight is less than or equal to the weight of tractor.

10 mph when weight is double the weight of tractor.

IMPORTANT: Do not tow a load that is more than double the weight of tractor.

Keep riders off machinery.

Riders obstruct the operator’s view; they could be struck by foreign objects or thrown from the machine.

Never allow children to operate equipment.

Practice safe maintenance

Understand the procedure before doing work. Use proper tools and equipment. Refer to the Operator’s Manual for additional information.

Lower the implement to the ground, put tractor in park, turn off engine, and remove key before performing maintenance.

Allow implement to cool completely.

Do not grease or oil the implement while it is in operation.

Inspect all parts. Make sure parts are in good condition and installed properly.

Remove buildup of grease, oil or debris.

Remove all tools and unused parts from implement before operation.

Prepare for emergencies

Be prepared if a fire starts.

Keep a first aid kit and fire extinguisher handy.

Keep emergency numbers for doctor, ambulance, hospital and fire department near phone.

Wear protective equipment.

Protective clothing and equipment should be worn.

Wear clothing and equipment appropriate for the job. Avoid loose fitting clothing.

Prolonged exposure to loud noise can cause hearing impairment or hearing loss. Wear suitable hearing protection such as earmuffs or earplugs.

Operating equipment safely requires the full attention of the operator. Avoid wearing radio headphones while operating machinery.

Avoid the high-pressure fluid hazard.

Escaping fluid under pressure can penetrate the skin causing serious injury.

Avoid the hazard by relieving pressure before disconnecting hydraulic lines.

Use a piece of paper or cardboard, not body parts, to check for suspected leaks. Wear protective gloves and safety glasses or goggles when working with hydraulic systems.

If an accident occurs, see a doctor immediately. Any fluid injected into the skin must be treated within a few hours or gangrene may result.

Safety Labels

Your Snow Blower comes equipped with all safety labels in place. They were designed to help you safely operate your implement. Read and follow their directions.

Keep all safety labels clean and legible.

Replace all damaged or missing labels. To order new labels go to your nearest TMG dealer or visit our dealer locator at TMG.com.

Some new equipment installed during repair requires safety labels to be affixed to the replaced component as specified by TMG. When ordering new components make sure the correct safety labels are included in the request.

Refer to this section for proper label placement. To install new labels:

- Clean the area the label is to be placed.
- Spray soapy water on the surface where the label is to be placed.
- Peel backing from label. Press firmly onto the surface.
- Squeeze out air bubbles with the edge of a credit card.

2. Introduction

TMG welcomes you to the growing family of new product owners. This implement has been designed with care and built by skilled workers using quality materials. Proper assembly, maintenance, and safe operating practices will help you get years of satisfactory use from the machine.

The Snow Blower is designed for Category 1 - three-point hitch or Quick-hitch system mounting. A shear-bolt PTO shaft is recommended.

The snow blower is mounted on the rear of the tractor, facing the tractor. While blowing snow the tractor is driving over the snow.

Using This Manual

This Operator's Manual is designed to help familiarize you with safety, assembly, operation, adjustments, troubleshooting, and maintenance. Read this manual and follow the recommendations to help ensure safe and efficient operation.

The information contained within this manual was current at the time of printing. Some parts may change slightly to assure you of the best performance.

To order a new Operator's or Parts Manual contact your authorized dealer. Manuals can also be printed from the TMG Service & Support Center by your dealer.

Terminology

"Right" or "Left" as used in this manual is determined by facing the direction the machine will operate while in use unless otherwise stated.

Note: A special point of information that the operator must be aware of before continuing.

Important: A special point of information related to its preceding topic. The intention is that this information should be read and noted before continuing.

3. Assembly and Set-up

Tractor Requirements

This snow blower is designed with a 3-Point category 1 hitch. Tractor horsepower rating should not exceed 75 PTO horsepower.

Packing Description

Remove any loose parts or packaging from the crate. Check that the goods are free of damage and missing parts.

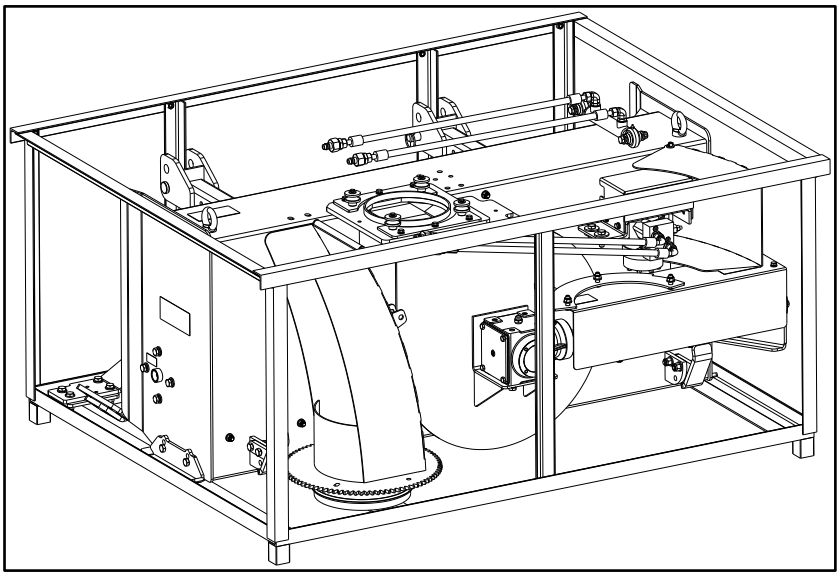

Fig.1 Your New Snow Blower as It Is Shipped to You

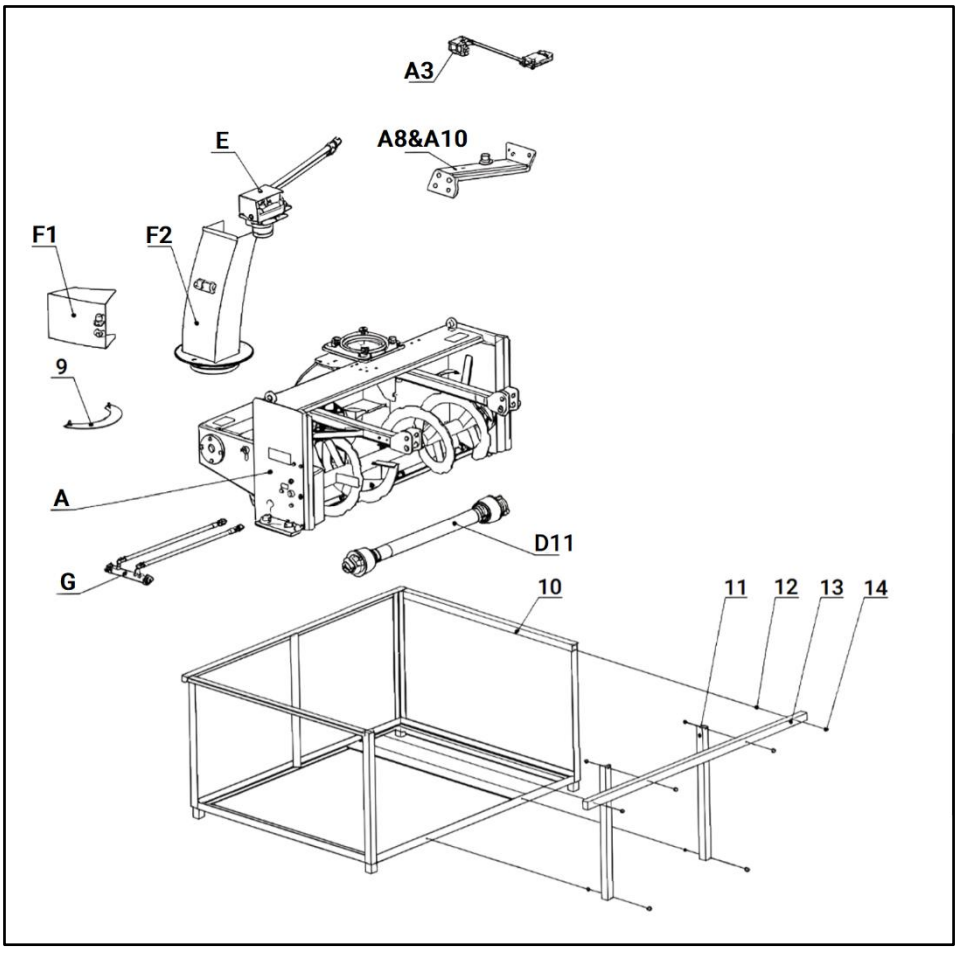

Fig.2 The Snow Blower and Accessory in The Crate Packing List

The detailed packing list is shown in the following table.

Item	Description	Qty.	Package Form
A	Main body of the snow blower	1	None
F1	Snow spray mask assy and fittings	1	Bubble film
F2	Discharge chute weldment	1	Bubble film
E	Hydraulic crank assy and fittings	1	Bubble film
A8&A10	R&L hitch brackets and fittings	1	Bubble film
G	Hydraulic actuator and fittings	1	Bubble film
A3	Top hitch bracket and fittings	1	Bubble film
D11	PTO driveline shaft	1	Bubble film
9	Rotation limiter and fittings	1	Bubble film
10	Iron crate	1	None
11	Removable angle steel support	2	Packed in crate
12	Locknut M10	6	Packed in crate
13	Removable angle steel	1	Packed in crate
14	Bolt M10×25	6	Packed in crate

Note: Driveline shaft shall be selected according to the power. If it is too long, please cut it to an appropriate length.

The detailed description of snow spray mask and fittings

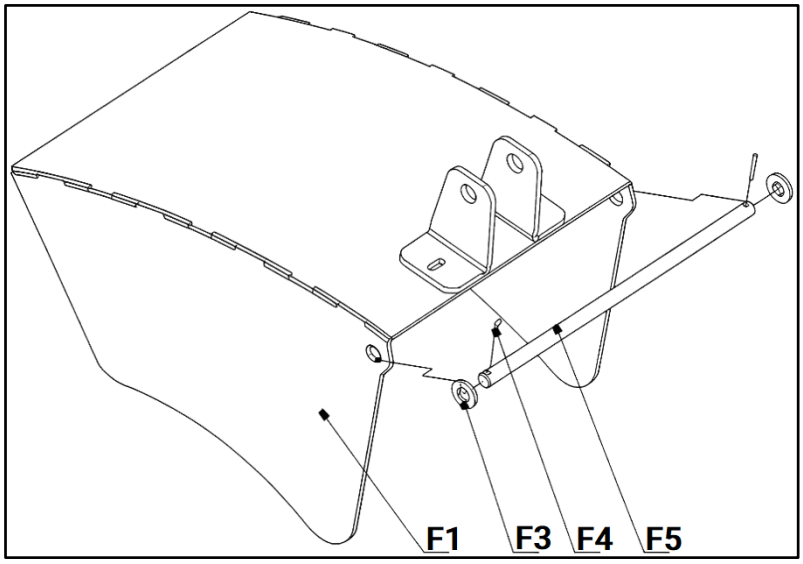

Fig.3 Snow Spray Mask and Fittings

Item	Description	Qty.
F1	Snow spray mask weldment	1
F3	Plain washer 10	2
F4	Cotter pin 2.5×16	2
F5	Hinge rod	1

The detailed description of hydraulic crank assy and fittings

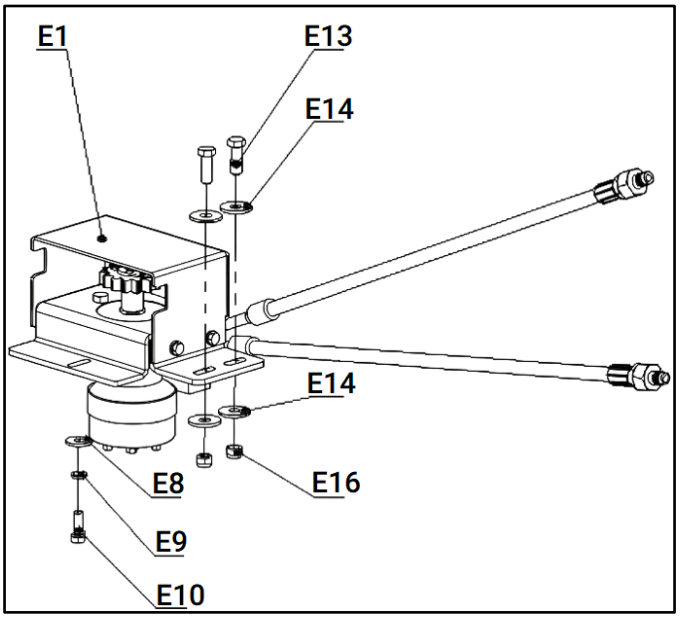

Fig.4 Hydraulic Crank Assy and Fittings

Item	Description	Qty.
E1	Hydraulic crank assy	1
E8	Large plain washer 10	1
E9	Spring Washer 10	1
E10	Bolt M10×30	1
E13	Bolt M12×35	2
E14	Large plain washer 12	4
E16	Locknut M12	2

The detailed description of R&L hitch brackets and fittings

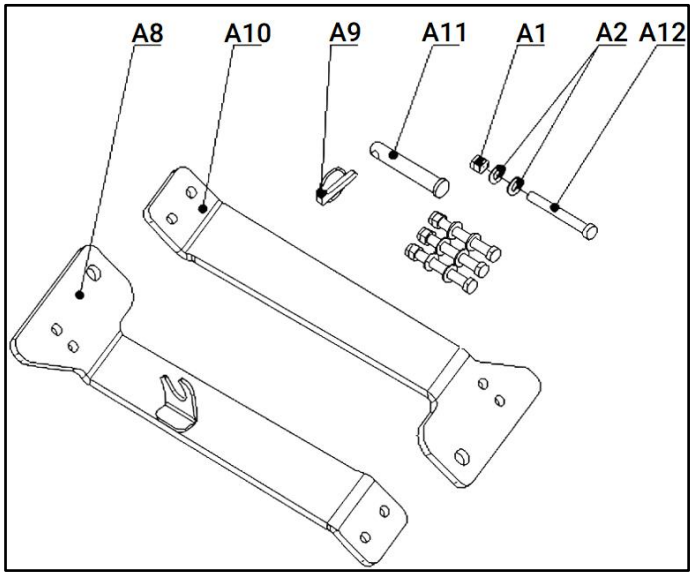

Fig.5 R&L Hitch Brackets and Fittings

Item	Description	Qty.
A1	Locknut M12	4
A2	Plain washer 12	8
A8	Hitch bracket weldment-L	1
A9	Safety lock pin Ø11×50	1
A10	Hitch bracket -R	1
A11	Hitch pin - Upper	1
A12	Bolt M12×100	4

The detailed description of hydraulic actuator and fittings

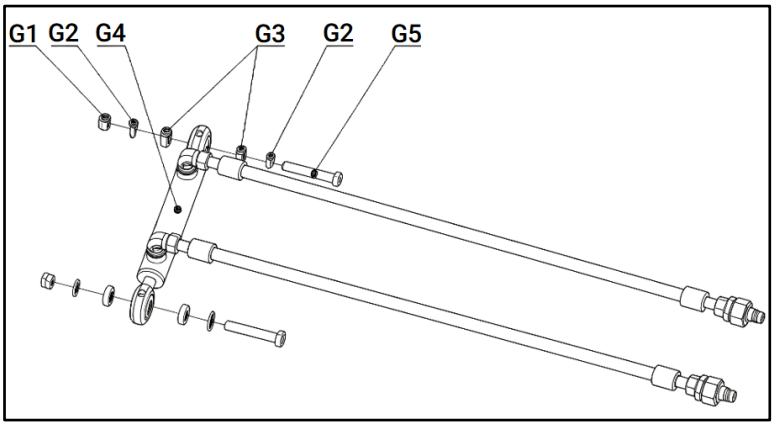

Fig.6 Hydraulic Actuator and Fittings

Item	Description	Qty.
G1	Locknut M12	2
G2	Plain washer 12	4
G3	Spacer H=7.9	4
G4	Hydraulic actuator assy	1
G5	Bolt M12×70	2

The detailed description of rotation limiter and fittings

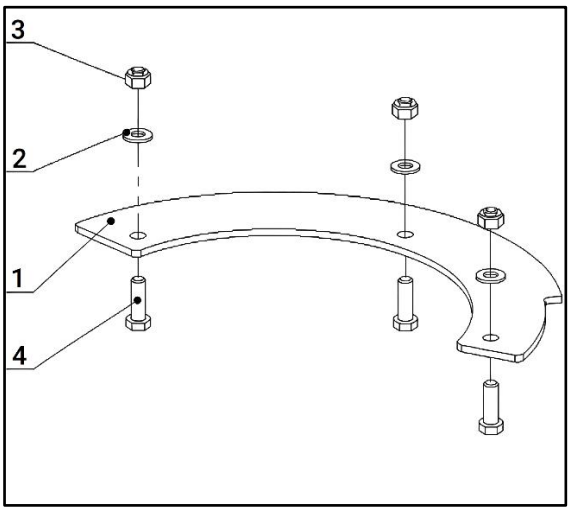

Fig.7 Rotation Limiter and Fittings

Item	Description	Qty.
1	Wheel frame	1
2	Plain washer 16	3
3	Bolt M16×95	3
4	Nut M16	3

The detailed description of top hitch bracket and fittings

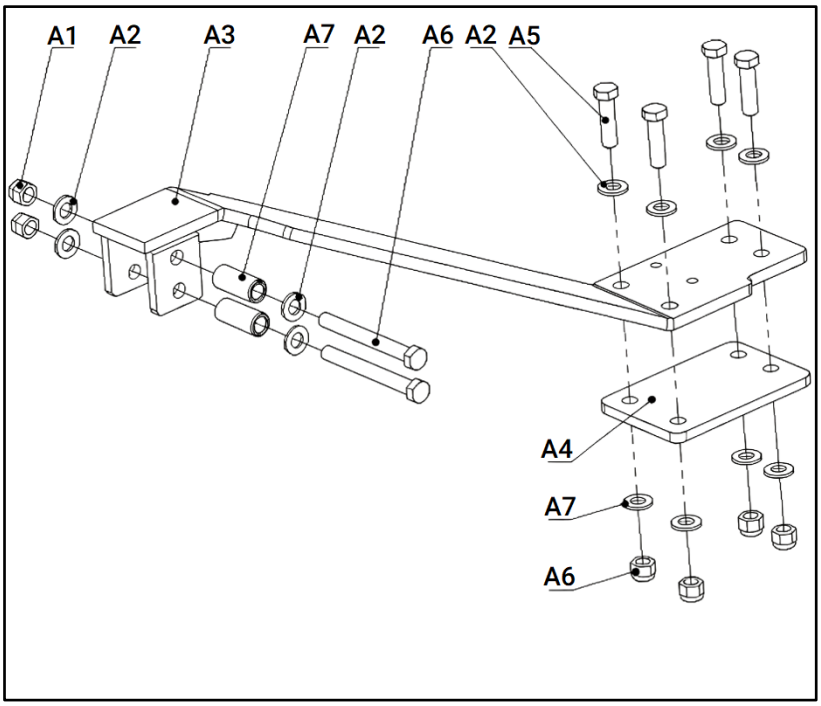

Fig.8 Top Hitch Bracket and Fittings

Item	Description	Qty.
A1	Locknut M12	6
A2	Plain washer 12	12
A3	Top hitch bracket	1
A4	Hitch shim	1
A5	Bolt M12×45	4
A6	Bolt M12×110	2
A7	Spacer L=40	2

Installation Guide

The installation wizard will guide you to finish the final assembly of your new snow blower easily.

Tool Required

- 1/2” ratchet wrench with 10 mm, 14 mm, 17 mm and 19 mm sockets
- 12-14 mm and 17-19 mm wrenches; long-nose pliers

Installation

Cut all zip ties and disassemble shipping crate.

Step1: Installing discharge chute

Remove the packaging of the discharge chute (#2)

Install the discharge chute (#2) onto the snow blower (#1). Refer to Fig.9.

Note: The supporting ring must be located in the pulley groove.

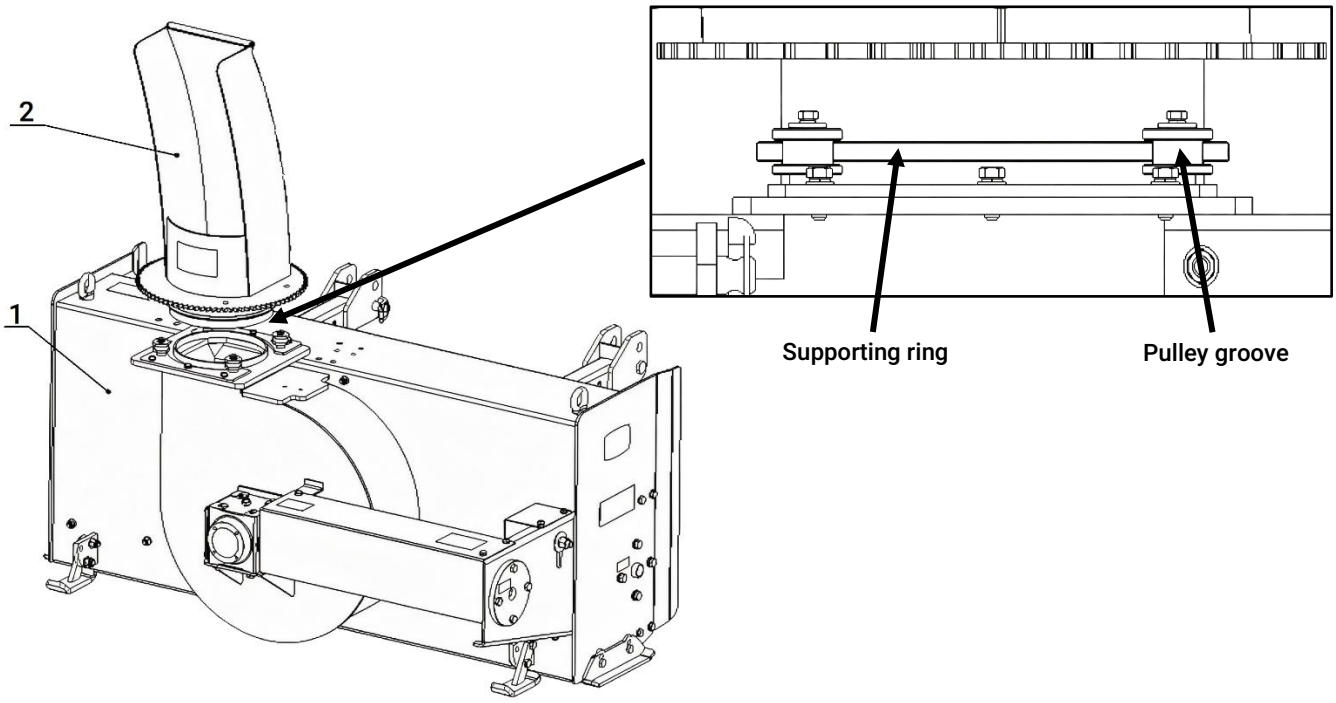

Fig.9 Installation of Discharge Chute

Step2: Installing snow spray mask and fittings

Remove the packaging of snow spray mask and fittings.

Remove the cotter pins (#F4) at both ends of the hinge rod (#F5) and push hinge rod (#F5) from snow spray mask (#F1).

Install the discharge chute (#F2) and snow spray mask (#F1) with hinge rod (#F5).

Install 2pcs of plain washer 10 (#F3) and cotter pins (#F4) to both ends of the hinge rod (#F5). Refer to Fig.10.

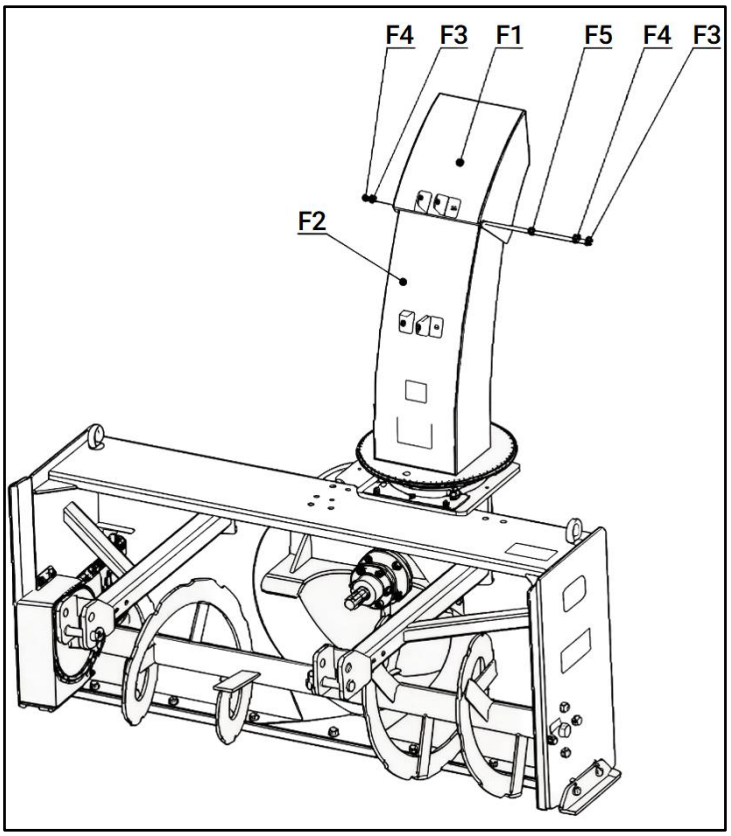

Fig.10 Installation of Snow Spray Mask and Fittings

Step3: Installing hydraulic actuator and fittings

Remove the packaging of the hydraulic actuator and fittings.

Remove all bolts M12×70 (#G5), locknut M12 (#G1), plain washers 12 (#G2), spacer (#G3) from the hydraulic actuator.

Install two ends of the hydraulic actuator on the snow spray mask (#F1) and discharge chute (#F2). Refer to Fig.11.

Note: If the hydraulic actuator length does not match, loosen two hollow bolts on the hydraulic actuator to release oil pressure, then push or pull the actuator rod. Do not forget to retighten all hollow bolts after adjustment.

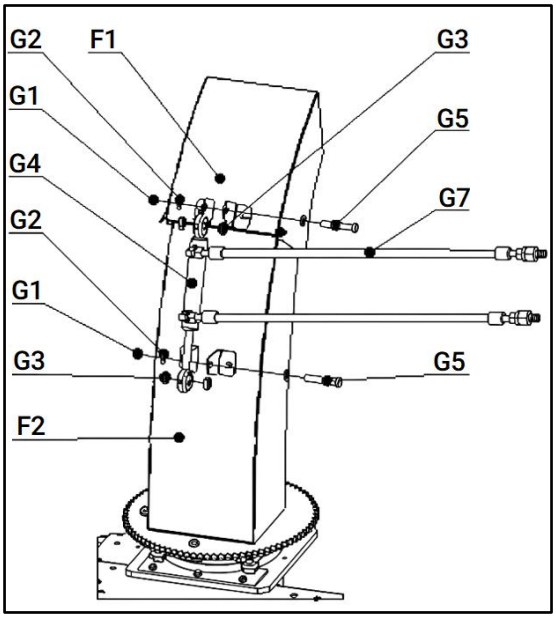

Fig.11 Installation of Hydraulic Actuator and Fittings

Step4: Installing R&L, top hitch brackets and fittings

Remove the packaging of R&L, top hitch brackets and fittings.

Install R&L (#A8, #A10) hitch brackets onto the snow blower (#A21) with bolt M12×100 (#A12,4pcs), plain washer 12 (#A2, 8pcs) and locknut M12 (#A1,4pcs), but not tighten all locknut. Refer to Fig.12.

Install top hitch bracket (#A3) onto the snow blower with hitch shim (#A4), bolt M12×45 (#A5, 4pcs), plain washer 12 (#A2,8pcs), locknut M12 (#A1,4pcs). Connect top hitch bracket and R&L hitch bracket with spacer (#A7, 2pcs), bolt M12×110 (#A6, 2pcs), plain washer 12 (#A2, 4pcs), locknut M12 (#A1,2pcs).

Insert hitch pin - upper (#A11) into R&L hitch bracket and lock with safety lock pin Ø11×50 (#A9).

Tighten all locknuts.

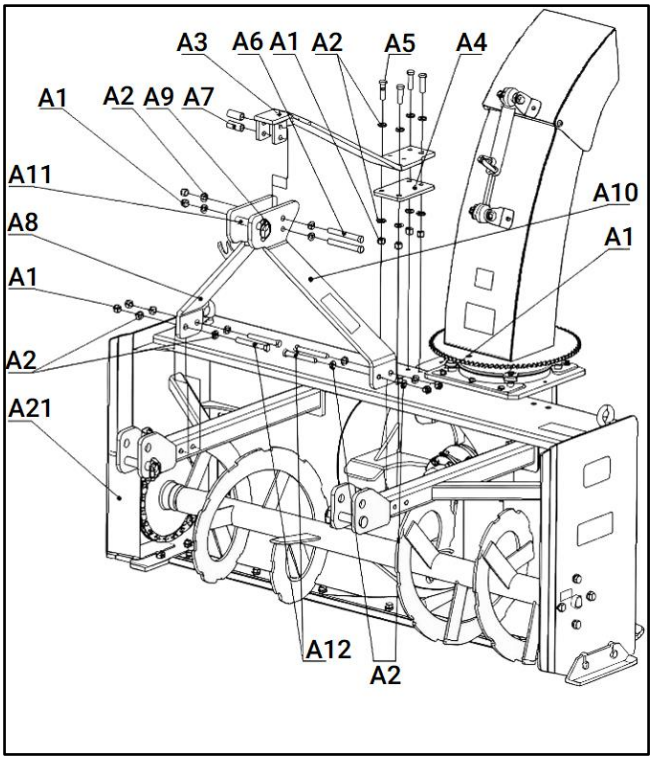

Fig.12 Installation of R&L, Top Brackets and Fittings

Step5: Installing rotation limiter and hydraulic crank assy and fittings.

Remove the packaging of rotation limiter and hydraulic crank assy and fittings.

Install rotation limiter (#3) on the back of the gear disc of the discharge chute (#F2) with bolt M10×30 (#5,3pcs), plain washer 10 (#6,3pcs) and locknut M10 (#7,3pcs). Tighten all bolts. Refer to Figure 13

Install hydraulic crank assy (#E1) onto the snow blower (#A21) and discharge chute (#F2) with bolt M12×35 (#E13,2pcs), large plain washer 12 (#E14,4pcs), locknut M12 (#E16,2pcs), bolt M10x30 (#E10,1pcs), spring washer 10 (#E9,1pcs) and large plain washer 10 (#E8,1pcs). Tighten all bolts or locknuts.

Note: Connect the hose adaptors to the tractor hydraulic outlets. Rotate clockwise and counterclockwise to verify that the gear of the hydraulic crank assembly meshes smoothly with the gear disc of the discharge chute.

It is necessary to apply an appropriate amount of the multi-purpose grease on the gear.

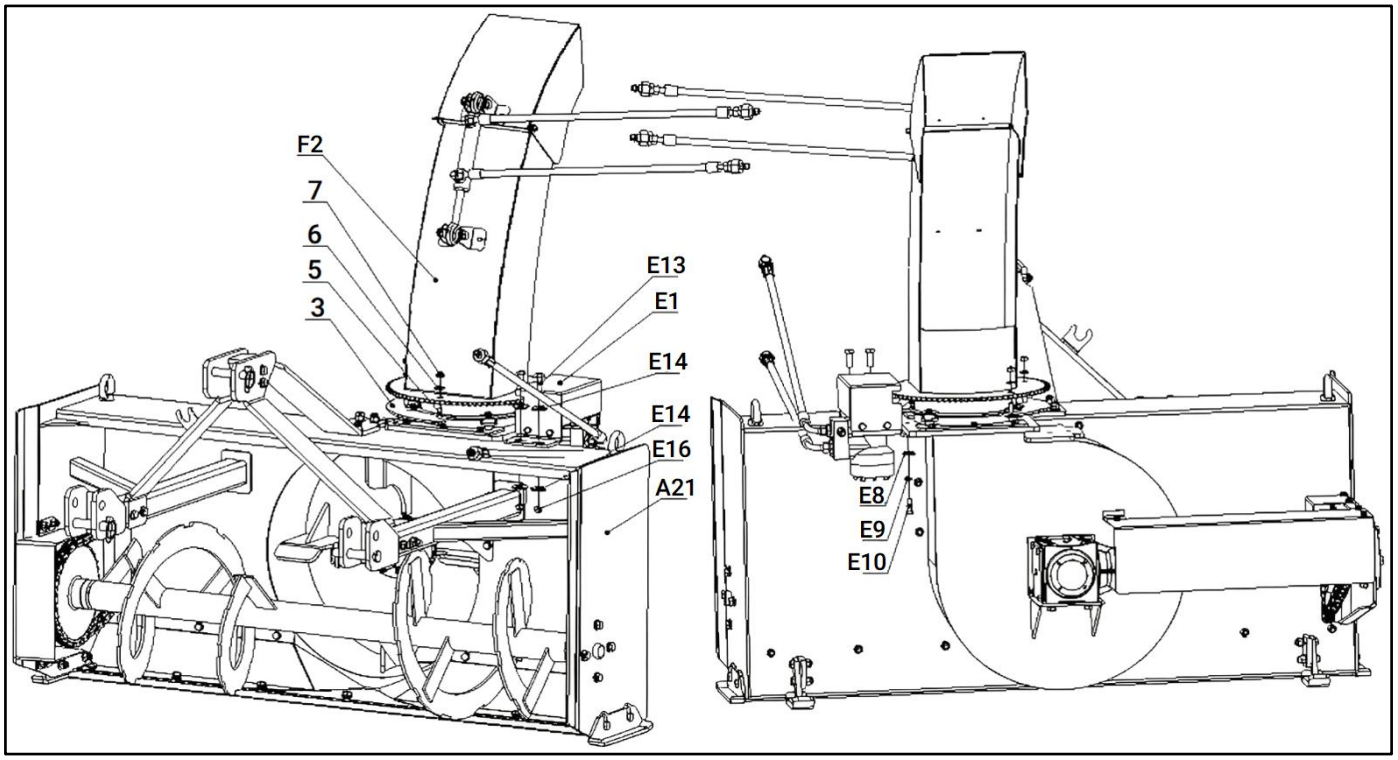

Fig.13 Installation of Rotation Limiter & Hydraulic Crank Assy and Fittings

WARNING

SAE EP 90W Gear oil must be filled before you finish final assembly and start your first use.

Overfilling or under filling gear oil may cause gearbox seizing or damage.

Step6: Gear oil filling

Check oil level in gearbox by removing the cap located on the side of the gearbox. Oil should be level with middle side of plug hole. Add oil necessary by removing top cap and side plug. Add oil until it flows from middle side plug hole. Refer to Fig.14.

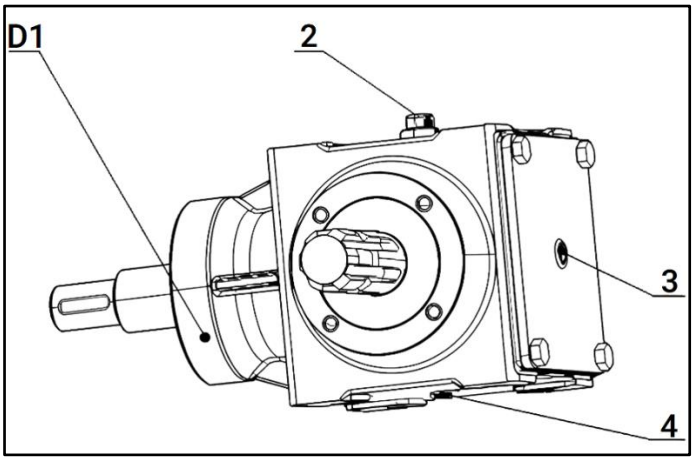

Fig.14 Gear Oil Filling

Item	Description
D1	Gearbox
2	Cap for inlet gearbox oil
3	Plug for gearbox oil level
4	Cap for discharge gearbox oil

Tractor Hook-Up

1. Slowly back tractor up to snow blower while using tractor's 3-Point hydraulic control lever to align lower lift arm hitch holes with lower hitch pins.
2. Always disengage power take-off, engage tractor park brake, shut tractor engine off, and remove switch key before dismounting from tractor.
3. Slide lower 3-point lift arms onto lower hitch pins. Secure hitch pins with safety lock pins.
4. Connect hitch hole in top center 3-Point link to upper clevis hitch with top hitch pin and safety lock pins.
5. Ensure that the lower hitch arms are blocked to prevent excessive side movement.
6. Return to tractor and slowly raise and lower implement carefully to ensure drawbar tires, and other equipment on the tractor do not make contact with snow blower frame and driveline. Move or remove the drawbar if needed.
7. Manually adjust one of the two lower 3-point lift arms up or down to level the snow blower from left to right.
8. The arms lift rods on your tractor's 3-point lift arm should be adjusted to allow for lateral float. Please consult your tractor's manual for adjusting instructions.

Driveline Installation

1. Slide driveline end with extended safety cone over spline shaft of gearbox and secure with attaching device.
2. Slide driveline over tractor's spline PTO shaft and secure with locking device of driveline.
3. Driveline should now be moved back and forth to ensure that it is secure on the PTO shaft of the tractor and blower gearbox.
4. Attach chain from the driveline shield to one of the upper hitch braces to ensure that the shield does not rotate.
5. Should driveline require shortening:
    - Hold the half-shafts next to each other in the shortest working position and mark them.
    - Shorten inner and outer guard tubes equally.
    - Shorten inner and outer sliding profiles by the same length as the guard tubes.
    - Proper overlap is a minimum of one-half the length of each tube, with both tubes being of equal length.
    - Round off all sharp edges and remove burrs. Grease sliding profiles.



CAUTION

Tractor PTO shield and all blower guards must be always in place during operation!

4. Operating Instructions

Transporting

NOTE: Always disengage PTO before raising blower to transport position.

1. When raising the blower to transport position, be sure that driveline does not contact tractor or blower. Adjust and set the tractor's 3-point hitch lift height so that the driveline does not contact blower deck in the fully raised position.
2. Be sure to reduce tractor ground speed when turning, leaving enough clearance so that the blower does not contact obstacles such as buildings, trees or fences.
3. Select a safe ground travel speed when transporting from one area to another. When traveling on roadways, transport in such a way that faster moving vehicles may pass safely.
4. When traveling over rough or hilly terrain, shift tractor to a lower gear.

CAUTION

When traveling on public roads, whether at night or during the day, use accessory lights and devices for adequate warning to operators of other vehicles. Comply with all Federal, State, and local laws.

Blowing Instructions

1. Stay in the seat of the tractor all the time that the blower is running. If the handle of manual crank can not reach the operator, just extend the handle bar.
2. If your driveway is paved, you may need to shorten the top center link to tilt the blower ahead so it will scrape the hard surface better.
3. If your driveway is gravel, you may want to lengthen the top center link to tilt the blower back so it will not dig into the loose gravel.
4. In colder climates where the bare ground is frozen during most of the winter the blower can be adjusted to scrape the snow off the frozen drive after freeze-up.
5. In areas where the gravel is not frozen and the snow depth exceeds the auger diameter, reduce travel speed to protect the PTO shaft and auger drive shaft.

Operating Instructions

1. Before beginning to blow, the following inspection should be performed:
2. Check oil level in gearbox.
3. Check that all plugs in gearbox have been replaced and tightened properly.
4. Be sure all bolts and nuts are tight.
5. Be certain all residual snow inside the chute and auger are clean.
6. Grease driveline shaft and all other grease fittings.
7. Lower snow blower to ground. Set tractor throttle at approximately ¼ open. Engage PTO to start auger rotating.
8. Operate with 540 rpm PTO tractor.
9. At first begin blowing at a slow forward speed and shift up until the desired speed is achieved maintaining 540 rpm.

5. Adjustments

Leveling the Blower

NOTE: Tractor and snow blower should be on level ground.

Leveling can be adjusted at the tractor's 3-point arms and center link.

1. Park tractor and snow blower on a level ground.
2. Slowly raise the snow blower using the tractor's lower lift arms until it is about 1 in. to 2 in. above the ground.
3. Ensure that the lower draw bars are stabilized to prevent excessive side movement.
4. Place a spirit level on the top of the snow blower deck from left to right and adjust one of the tractor 's lower draw bars up or down until the snow blower is level from left to right.
5. Adjust tractor's upper draw bar to place the upper hitch pin vertically above or slightly behind the snow blower hitch pins.
6. Slowly operate the tractor draw bars up and down to check for clearance between the tires, frame, drawbar, etc.

Auger Chain Adjustment

CAUTION

Excessive tension on the chain may lead to premature failure of chain and drive components.

The chain tension should be checked after the first 20 hours of use. And then every 40 hours of use.

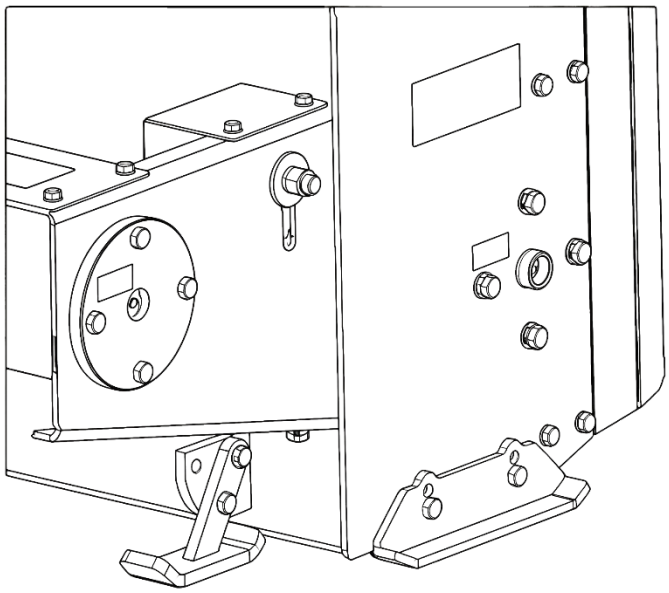

Fig.15 Chain Tension

1. Check auger chain tension.
2. Loosen the chain tension bolt and press it downwards.
3. Retighten locknut.

6. Maintenance and Lubrication

Maintenance

Proper servicing and adjustment is the key to the long life of any farm implement. With careful and systematic inspection, you can avoid costly maintenance, time and repair.

CAUTION

For safety reasons, each maintenance operation must be performed with tractor PTO disengaged, blower lowered completely to ground and tractor engine shut off with ignition key removed.

1. After using the blower for several hours, check all bolts to be sure they are tight and check chain tension.
2. Replace any worn, damaged or illegible safety decals by obtaining new decals from dealer.

Storage

At the end of the working season or when the blower will not be used for a long period, it is good practice to clean off any dirt or grease that may have accumulated on the blower and any of moving parts.

1. Clean as necessary.
2. Check bucket blade for wear and replace if necessary.
3. Inspect blower for loose, damaged or worn parts and adjust or replace as needed.
4. Store unit inside if possible for longer life.
5. Repaint parts where paint is worn or scratched to prevent rust.
6. Replace all damaged or missing decals.

Lubrication

Driveline Shaft U-Joints



Type of Lubrication: Multi-purpose Grease

Quantity: 4 to 8 pumps

Driveline Profiles Tube



Type of Lubrication: Multi-purpose Grease

Quantity: Clean & coat inner profile tube of driveline with a light film of grease and then reassemble.

Cutter Inner Tube bearings



Type of Lubrication: Multi-purpose Grease

Quantity: As required

Gearbox



Type of Lubrication: SAE 90W Gear Lube.

Check oil level through cap for gearbox oil level. Do not overfill!

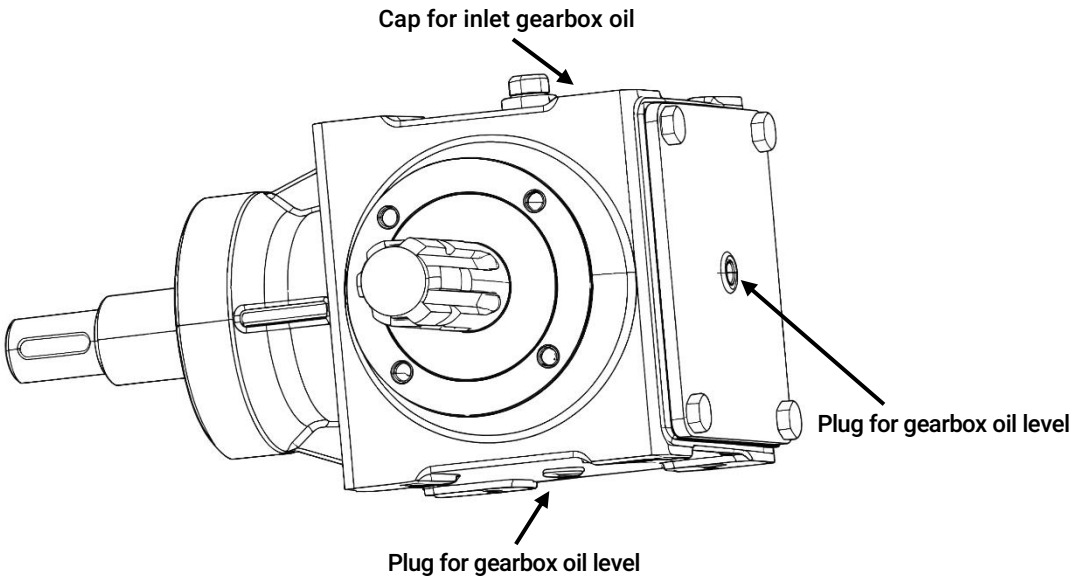

WARNING

Overfilling or under filling gear oil may cause gearbox seizing or damage and driveline shaft twisting.

IMPORTANT: Gearboxes are shipped without gear oil. Gear oil must be filled before the first operation.

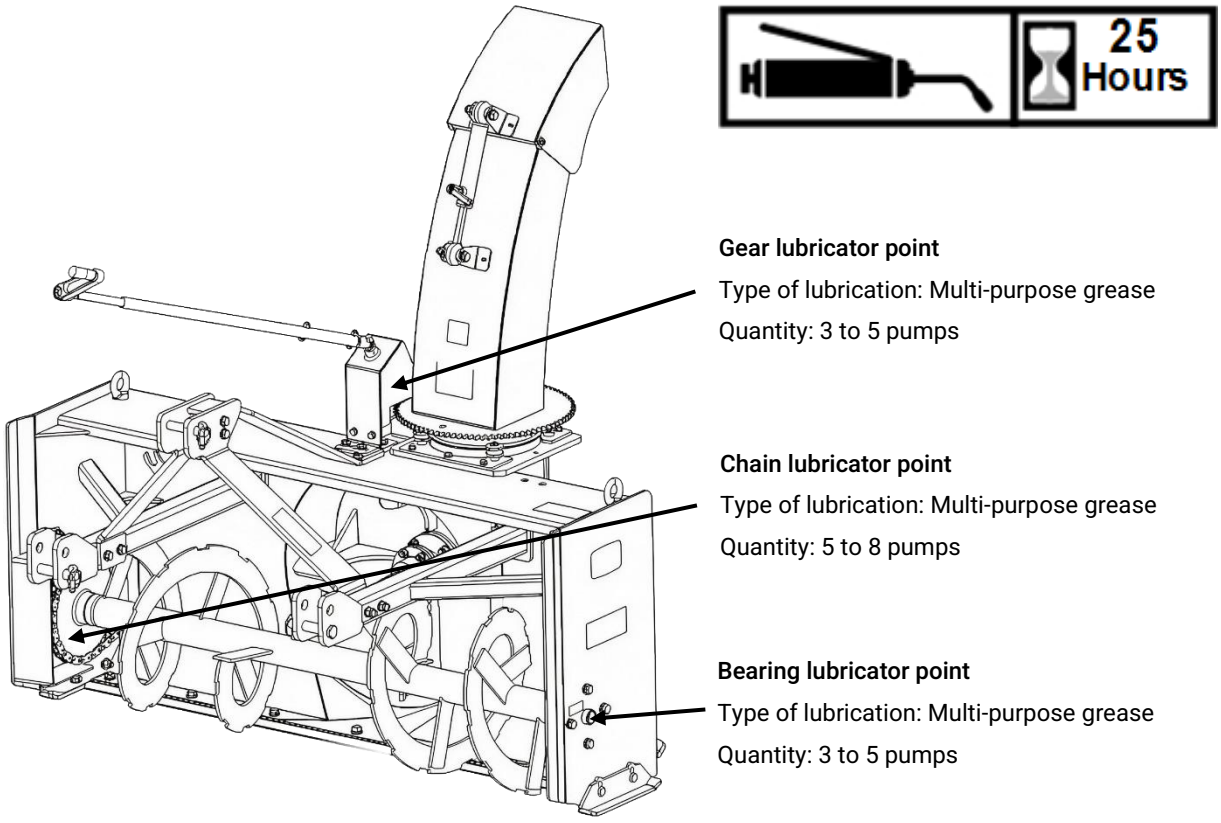

Gear lubricator point

Type of lubrication: Multi-purpose grease

Quantity: 3 to 5 pumps

Chain lubricator point

Type of lubrication: Multi-purpose grease

Quantity: 5 to 8 pumps

Bearing lubricator point

Type of lubrication: Multi-purpose grease

Quantity: 3 to 5 pumps

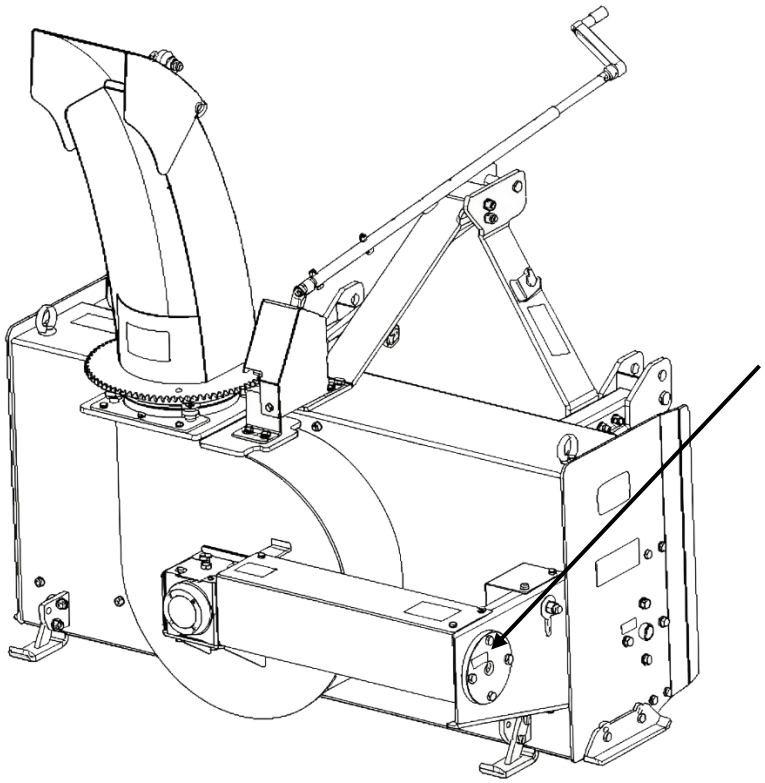



Bearing lubricator point

Type of lubrication: Multi-purpose grease

Quantity: 3 to 5 pumps

7. Specifications & Capacities

Model	TMG-TBD48	TMG-TBD60	TMG-TBD72
Working width	46"(1170mm)	58"(1470mm)	70"(1770mm)
Dimensions (L×W×H)	49"×48"×63"	61.5"×48"×63"	72.5"×48"×63"
3-Point Hitch	CAT 1 or 2		
PTO Speed	540rpm		
Power Tractor	25-50HP	30-50HP	30-60HP
Product Weight	683 lb (310 Kg)	731 lb (332 Kg)	814 lb (369 Kg)

8. Troubleshooting

Problem	Solution
Do not try to clean auger and discharge chute when blower is running. Bodily harm may occur!	
Not Throwing Snow	Operate at full throttle (540 PTO rpm), check PTO speed and tractor engine.
	Auger drive shaft damage, replace it.
	Bearing damage, replace the bearings in the bearing seats at both ends.
	The chain has jumped off the sprocket; reinstall it.
	Shear pin damage, replace shear pin of the PTO shaft.
	The chute is jammed; clean the residual snow from inside the chute.
Excessive Vibration	Discharge fan blade is bent or missing.
Gearbox Noisy	Check gearbox oil level.
Auger is not Turning	Auger drive shaft damage, replace it.
	Bearing damage, replace the bearings in the bearing seats at both ends.
	Slow down the tractor speed and reduce the snow feed.
	The chain has jumped off the sprocket; reinstall it.
	Shear pin damage, replace shear pin of the PTO shaft.

9. Appendix

Warranty

TMG warrants to the original purchaser that this product will be free from defects in material and workmanship beginning on the date of purchase by the end user according to the following schedule when used as intended and under normal service and conditions for personal use.

Overall Unit and Driveline: One-year.

Blades and Belts: Considered wear items.

This warranty is limited to replacement of any defective part by the manufacturer and installation by the dealer of any such replacement part, and does not cover common wear items such as blades, belts and auger wear parts. TMG reserves the right to inspect any equipment or parts which are claimed to have been defective in material or workmanship.

This warranty does not apply to any part or product which in TMG's judgment shall have been misused or damaged by accident or lack of normal maintenance or care, or which has been repaired or altered in a way which adversely affects its performance or reliability, or which has been used for a purpose for which the product was not designed. Misuse also specifically includes failure to properly maintain oil levels, grease points, and driveline shafts.

Claims under this warranty must be made to the dealer which originally sold the product and all warranty adjustments must be made through such dealer. TMG reserves the right to make changes in materials or design of the product at any time without notice.

This warranty shall not be interpreted to render TMG liable for damages of any kind, direct, consequential, or contingent to property. Furthermore, TMG shall not be liable for damages resulting from any cause beyond its reasonable control. This warranty does not extend to loss of crops, any expense or loss for labor, supplies, rental machinery or for any other reason.

No other warranty of any kind whatsoever, express or implied, is made with respect to this sale; and all implied warranties of merchantability and fitness for a particular purpose which exceed the obligations set forth in this written warranty are hereby disclaimed and excluded from this sale.

Bolt Torque

The tables shown below give correct torque values for various bolts and cap screws. Tighten all bolts to the torques specified unless otherwise noted. Check tightness of bolts periodically, using bolt torque chart as a guide. Replace hardware with the same strength bolt.

English Torque Specifications

Bolt Diameter	Bolt Torque					
	SAE 2		SAE 5		SAE 8	
	N.m	lb-ft	N.m	lb-ft	N.m	lb-ft
1/4"	8	6	12	9	17	12
5/16"	13	10	25	19	36	27
3/8"	27	20	45	33	63	45
7/16"	41	30	72	53	100	75
1/2"	61	45	110	80	155	115
9/16"	95	60	155	115	200	165
5/8"	128	95	215	160	305	220
3/4"	225	165	390	290	540	400
7/8"	230	170	570	420	880	650

Metric Torque Specifications

Bolt Diameter	Bolt Torque			
	8.8		10.9	
	N.m	lb-ft	N.m	lb-ft
M3	0.5	0.4	1.8	1.3
M4	3	2.2	4.5	3.3
M5	6	4	9	7
M6	10	7	15	11
M8	25	18	35	26
M10	50	37	70	52
M12	90	66	125	92
M14	140	103	200	148
M16	225	166	310	229
M20	435	321	610	450
M24	750	553	1050	744
M30	1495	1103	2100	1550
M36	2600	1917	3675	2710

Torque figures indicated above are valid for non-greased or non-oiled threads and heads otherwise specified. Therefore, do not grease or oil bolts or cap screws unless otherwise specified in this manual. When using locking elements, increase torque values by 5%.

10. Exploded View and Parts List

TMG-TBD48/TMG-TBD60/TMG-TBD72 Part Breakdown

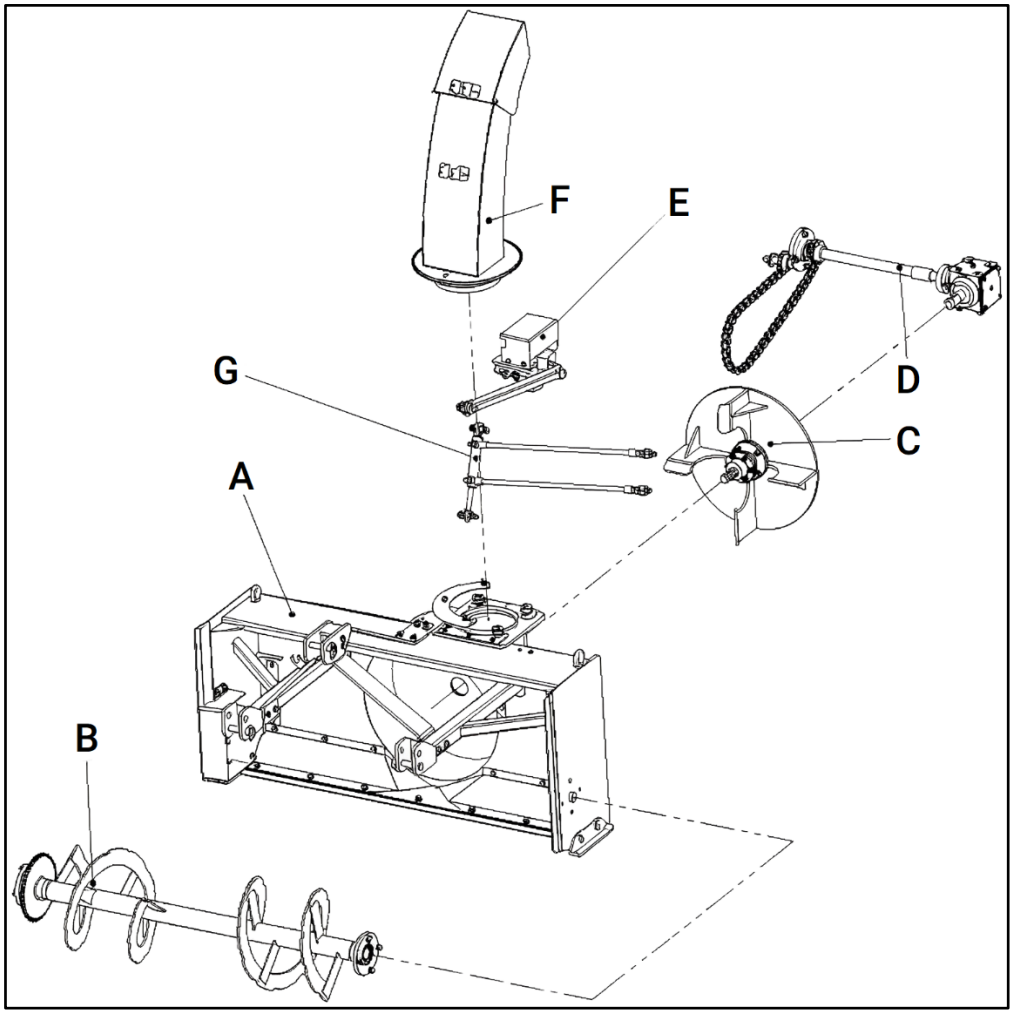

TMG-TBD48/TMG-TBD60/TMG-TBD72 Part Breakdown List

No.	Description	Qty	Remark
A	Main body assembly	1	
B	Auger assembly	1	
C	Fan assembly	1	
D	Transmission assembly	1	
E	Hydraulic crank assembly	1	
F	Discharge chute assembly	1	
G	Hydraulic actuator assembly	1	

Diagram A-Main Body Assembly Breakdown

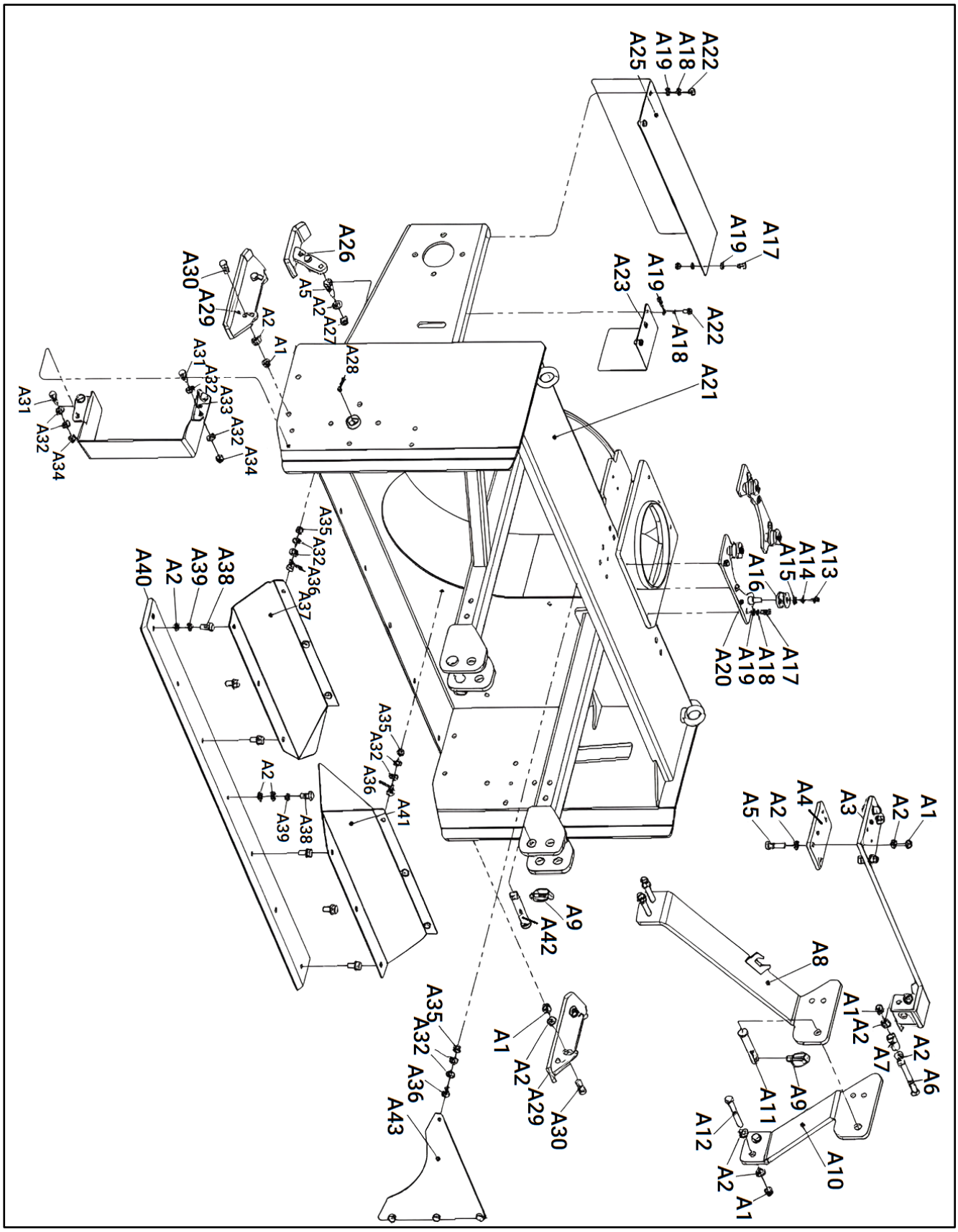

Diagram A-Main Body Assembly Breakdown List

No.	Description	Qty	Remark
A1	Locknut M12 GR8	14	
A2	Plain washer 12	35	TMG-TBD48
		36	TMG-TBD60
		36	TMG-TBD72
A3-TBD48	Top hitch bracket weldment	1	
A3-TBD60			
A3-TBD72			
A4-TBD48	Hitch shim	1	
A4-TBD60			
A4-TBD72			
A5	Bolt M12×45 GR8.8	8	
A6	Bolt M12×110 GR8.8	2	
A7	Spacer L=40	2	
A8	Hitch bracket weldment - L	1	
A9	Safety lock pin Ø11×50	3	
A10	Hitch bracket - R	1	
A11	Hitch pin – upper	1	
A12	Bolt M12×100 GR8.8	4	
A13	Bolt M6×20	4	
A14	Spring washer 6	4	
A15	Large plain washer 6	4	
A16	Pulley	4	
A17	Bolt M8×20 GR8.8	7	
A18	Spring washer 8	10	
A19	Plain washer 8	12	
A20	Pressure plate	2	
A21-TBD48	Main body weldment	1	
A21-TBD60			
A21-TBD72			
A22	Bolt M8×16 GR8.8	4	
A23	Chain cover	1	
A24	Locknut M8 GR8	1	
A25-TBD48	Transmission shaft cover	1	
A25-TBD60			
A25-TBD72			
A26	Stand	2	
A27	Locknut M12 GR8	4	
A28	Grease nipple M6×1	2	
A29	Skid shoe	2	
A30	Bolt M12×35 GR8.8	4	
A31	Bolt M10×30 GR8.8	4	
A32	Plain washer 10	24	TMG-TBD48
		28	TMG-TBD60
		28	TMG-TBD72
A33	Front cover	1	

No.	Description	Qty	Remark
A34	Locknut M10 GR8	4	
A35	Locknut M10 GR5	8	TMG-TBD48
		10	TMG-TBD60
		9	TMG-TBD72
A36	Bolt M10×25 GR8.8	8	TMG-TBD48
		10	TMG-TBD60
		9	TMG-TBD72
A37-TBD48	Snow preventer - R	1	
A37-TBD60			
A37-TBD72			
A38	Bolt M12×1.5×25	5	TMG-TBD48
		7	TMG-TBD60
		7	TMG-TBD72
A39	Spring washer 12	5	TMG-TBD48
		7	TMG-TBD60
		7	TMG-TBD72
A40-TBD48	Bucket blade	1	
A40-TBD60			
A40-TBD72			
A41-TBD48	Snow preventer - L	1	
A41-TBD60			
A41-TBD72			
A42	Hitch pin - Lower	2	
A43-TBD48	Fan cover	1	
A43-TBD60			
A43-TBD72			

Diagram B-Auger Assembly Breakdown

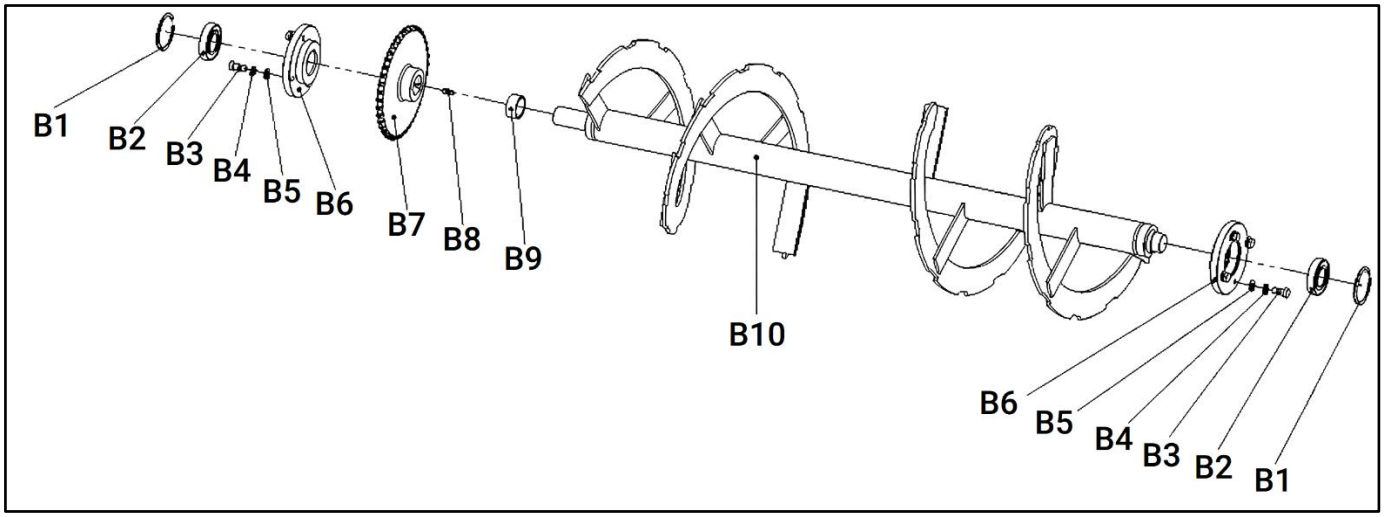

Diagram B-Auger Assembly Breakdown List

No.	Description	Qty	Remark
B1	Circlip for hole Ø80	2	
B2	Deep groove ball bearing 6208-RZ	2	
B3	Bolt M12×30 GR8.8	8	
B4	Spring washer 12	8	
B5	Plain washer 12	8	
B6	Auger bearing seat	2	
B7	Large sprocket	1	
B8	Flat key 8×30	1	
B9	Auger bushing	1	
B10-TBD48	Auger weldment	1	
B10-TBD60			
B10-TBD72			

Diagram C-Fan Assembly Breakdown

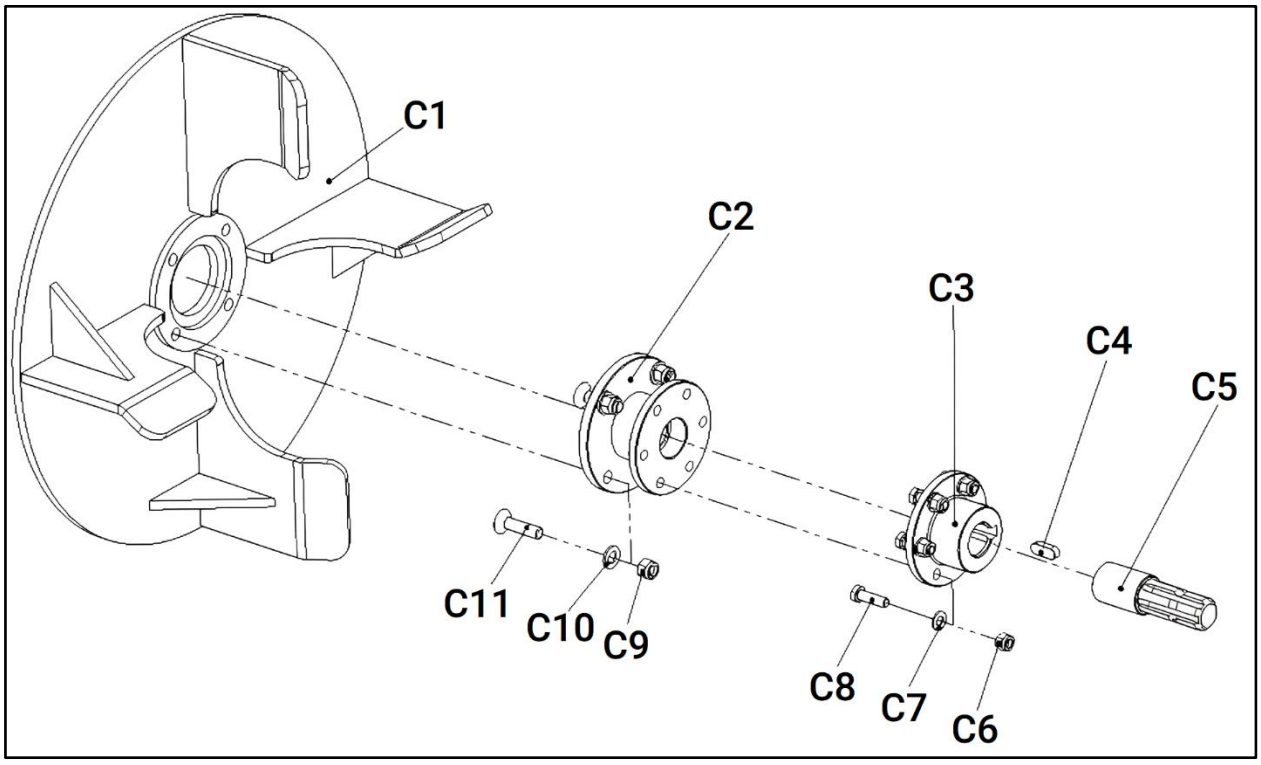

Diagram C-Fan Assembly Breakdown List

No.	Description	Qty	Remark
C1-TBD48	Fan weldment	1	
C1-TBD60			
C1-TBD72			
C2	Connecting sleeve	1	
C3	Connecting flange	1	
C4	Flat key 12×8×32	1	
C5	Connect spindle	1	
C6	Locknut M10 GR8	6	
C7	Plain washer 10	6	
C8	Bolt M10×35 GR8.8	6	
C9	Locknut M12 GR8	4	
C10	Plain washer 12	4	
C11	HCHS M12×50 GR8.8	4	

Diagram D-Transmission Assembly Breakdown

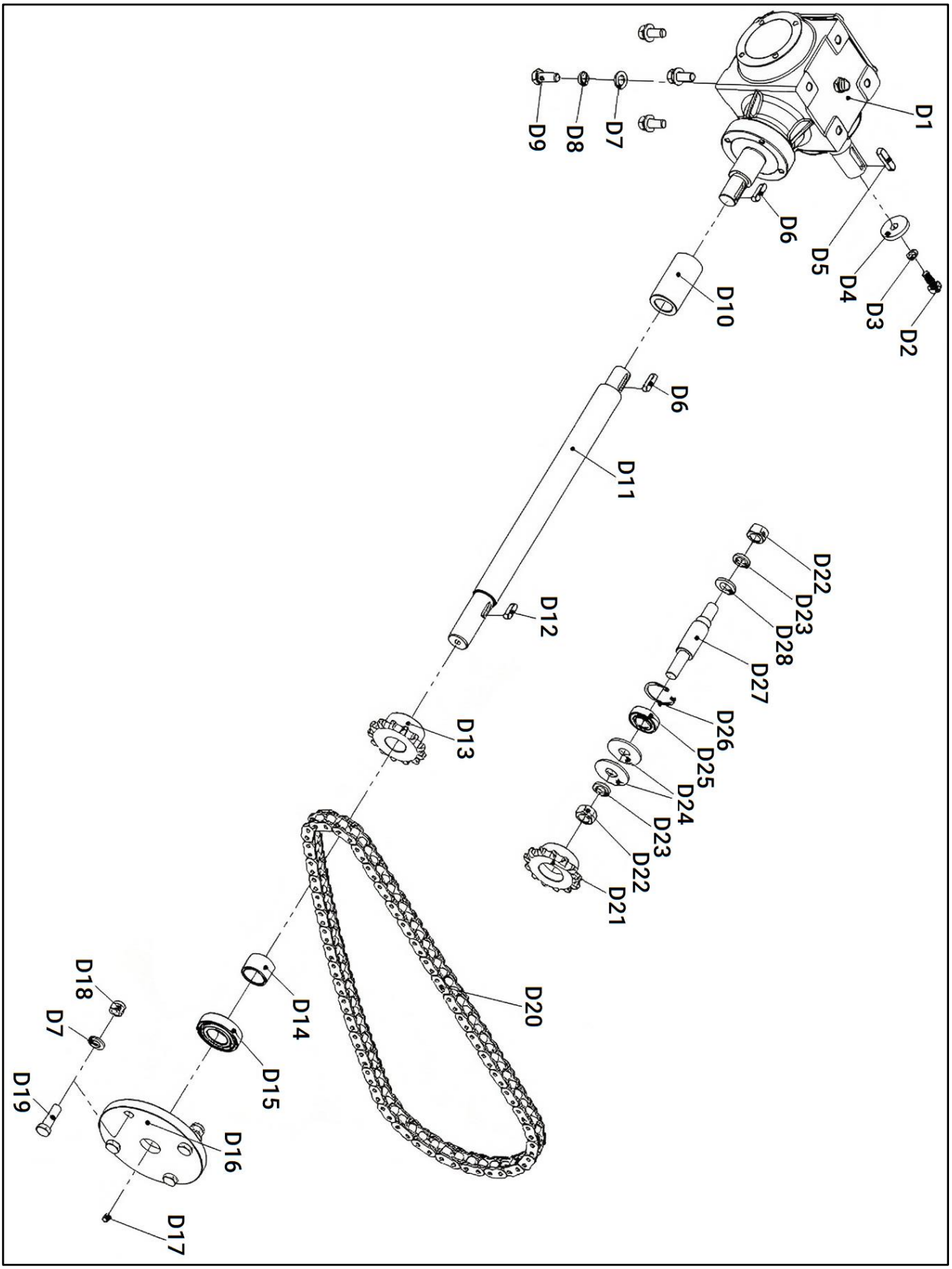

Diagram D-Transmission Assembly Breakdown List

No.	Description	Qty	Remark
D1	Gearbox	1	
D2	Bolt M10×25 GR8.8	1	
D3	Spring washer 10	1	
D4	Shim	1	
D5	Flat key 10×40	1	
D6	Flat key 8×30	1	
D7	Plain washer 12	8	
D8	Spring washer 12	4	
D9	Bolt M12×30 GR8.8	4	
D10	Shaft sleeve	1	
D11	Transmission shaft L=237	1	TMG-TBD48
	Transmission shaft L=387	1	TMG-TBD60
	Transmission shaft L=537	1	TMG-TBD72
D12	Flat key 8×26	1	
D13	Small sprocket	1	
D14	Sprocket bushing	1	
D15	Deep groove ball bearing 6206-RZ	1	
D16	Bearing seat	1	
D17	Grease nipple M6×1	1	
D18	Locknut M12 GR8	4	
D19	Bolt M12×40 GR8.8	4	
D20	Auger chain 12A-1×87	1	TMG-TBD48
	Auger chain 12A-1×87	1	TMG-TBD60
	Auger chain 12A-1×88	1	TMG-TBD72
D21	Tensioner	1	
D22	Hex. Nut M16	2	
D23	Spring washer 16	2	
D24	Large plain washer 16	2	
D25	Deep groove ball bearing 6004-2RZ	1	
D26	Circlip for hole Ø42	1	
D27	Tension shaft	1	
D28	Plain washer 16	1	

Diagram E-Hydraulic Crank Assembly Breakdown

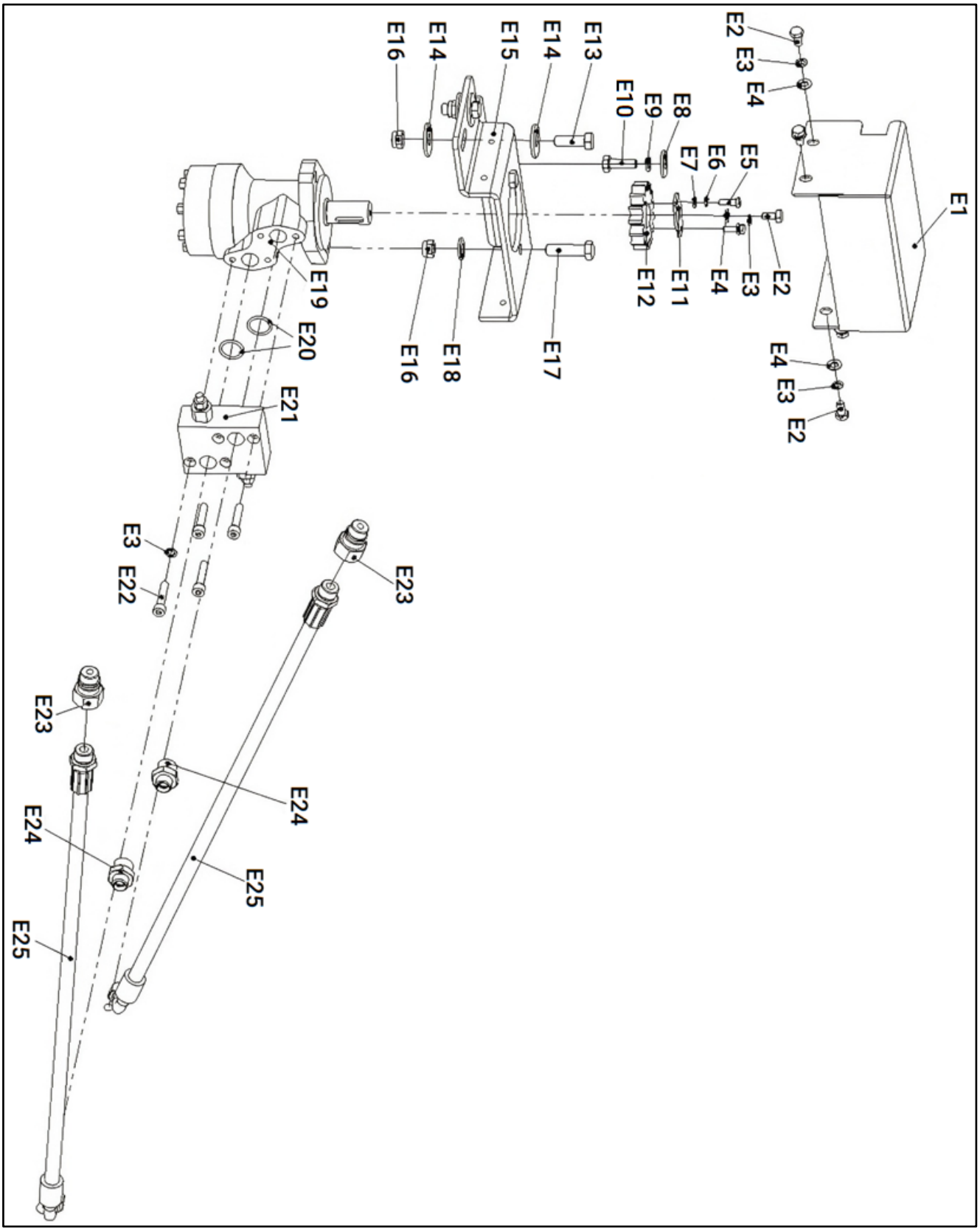

Diagram E-Hydraulic Crank Assembly Breakdown List

No.	Description	Qty	Remark
E1	Hydraulic crank cover	1	
E2	Bolt M8×16 GR8.8	5	
E3	Spring Washer 8	9	
E4	Plain washer 8	5	
E5	Bolt M6×20 GR8.8	2	
E6	Spring washer 6	2	
E7	Plain washer 6	2	
E8	Large plain washer 10	1	
E9	Spring washer 10	1	
E10	Bolt M10×30 GR8.8	1	
E11	Hydraulic crank gear holder	1	
E12	Hydraulic crank gear	1	
E13	Bolt M12×35 GR8.8	2	
E14	Large plain washer 12	4	
E15	Hydraulic motor base	1	
E16	Locknut M12 GR5	4	
E17	Bolt M12×45 GR8.8	2	
E18	Plain washer 12	2	
E19	Hydraulic motor	1	
E20	O-ring 22.4×2.65	2	
E21	Relief valve	1	
E22	Bolt M8×40 GR8.8	4	
E23	G1/2” adaptor (male)	2	
E24	Transition Joint G1/2” – M18×1.5	2	
E25	Oil pipe L=2000	2	

Diagram F-Discharge Chute Assembly Breakdown

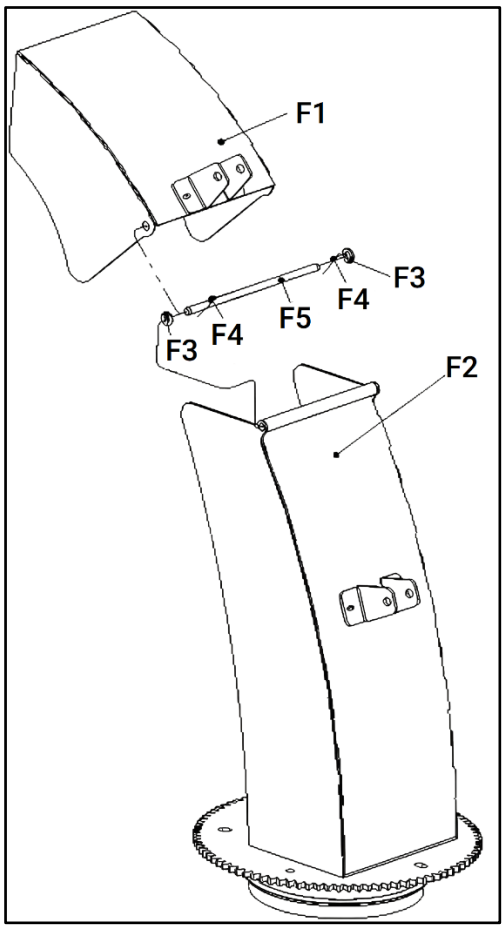

Diagram F-Discharge Chute Assembly Breakdown List

No.	Description	Qty	Remark
F1	Snow spray mask weldment	1	
F2	Discharge chute weldment	1	
F3	Plain washer 10	2	
F4	Cotter pin Ø2.5×16	2	
F5	Hinge rod	1	

Diagram G-Hydraulic Actuator Assembly Breakdown

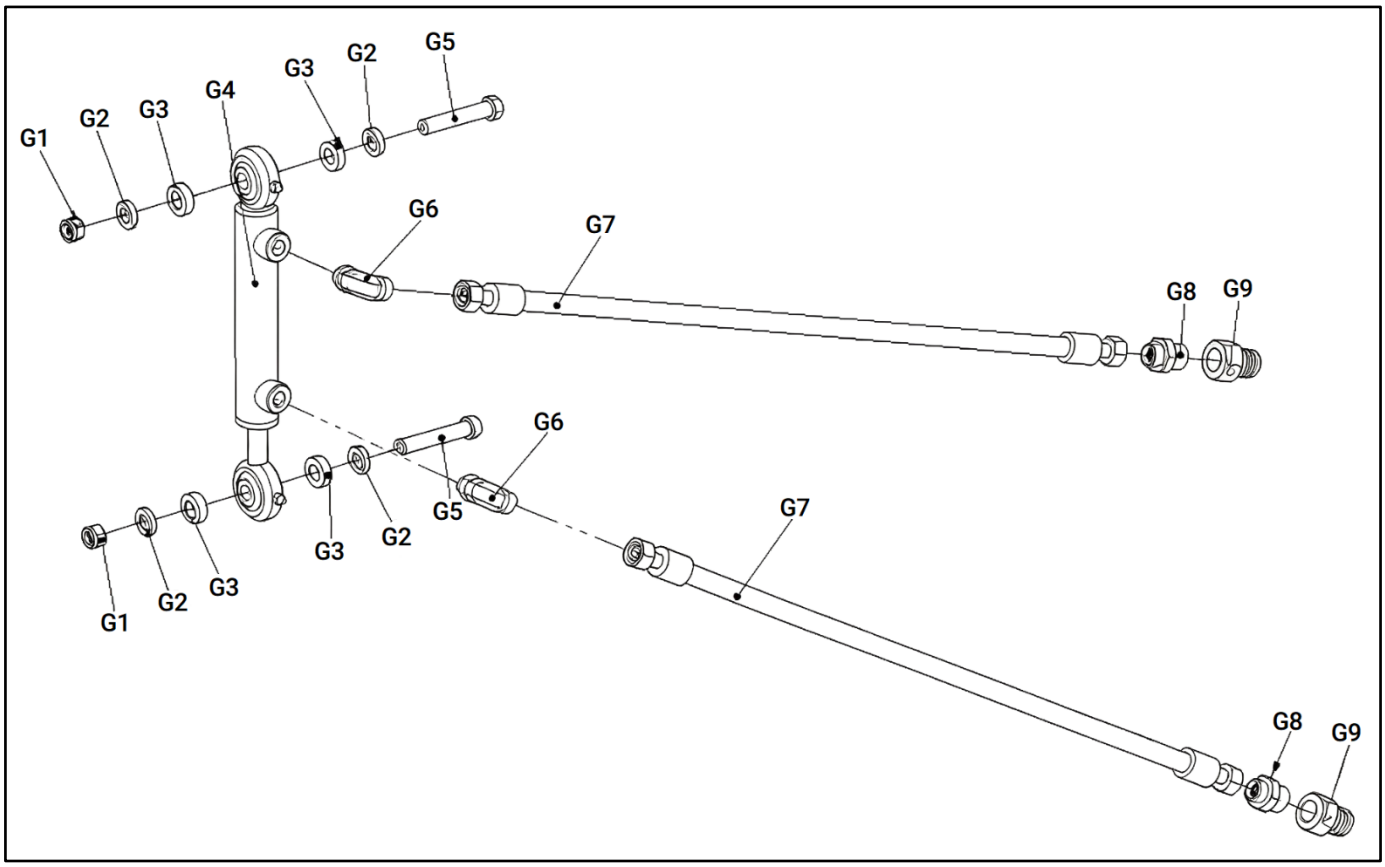

Diagram G-Hydraulic Actuator Assembly Breakdown List

No.	Description	Qty	Remark
G1	Locknut M12 GR8	2	
G2	Plain washer 12	4	
G3	Spacer H=7.9	4	
G4	Hydraulic actuator	1	
G5	Bolt M12×70 GR8.8	2	
G6	Transition Joint 90°M18×1.5 – M14×1.5	2	
G7	Oil pipe L=2000	2	
G8	Transition Joint 90° G1/2” – M18×1.5	2	
G9	G1/2” adaptor (male)	2	

WARRANTY INFORMATION: Please refer to our website for detailed warranty conditions and coverage.
For the most up-to-date and comprehensive warranty information, visit **www.tmgindustrial.com**