TMG INDUSTRIAL

TMG-TAT35/47
PRODUCT MANUAL
v.2026.11.19

# 35"(0.9m) / 47"(1.2m) Hedge Trimmer




**⚠ WARNING**



Please read and understand the product manual completely before assembly
- Check the parts list to make sure all parts are received.
- Wear safety goggles or other protective gear while assembling.
- Do not return products to dealers, who are not equipped to handle returns.

Missing parts or questions about assembly?
Email: cs@tmgindustrial.com
Or visit: tmgindustrial.com

# Table of Contents


1. Safety Information ..... 2
   1.1 Potential Significant Dangers Associated with the Use of This Machine ..... 2
   1.2 Before Using This Machine You Must ..... 2
   1.3 When Not to Use This Machine ..... 3
2. Specifications ..... 4
3. Initial Attachment to Tractor ..... 5
   3.1 Axle Bracket / Catch Assembly-Fitting by Dealer ..... 6
   3.2 Standard Type Brackets ..... 7
   3.3 Alternative Type Brackets ..... 8
   3.4 Tractor Attachment-by Customer or Dealer ..... 9
4. Removal from Tractor ..... 13
5. Storage ..... 13
6. Tractor Attachment-Linkage Mounted Machines ..... 14
   6.1 Flail head Attachment ..... 18
   6.2 Removal from Tractor ..... 18
   6.3 Storage ..... 19
   6.4 Subsequent Attachment to an Identical Tractor ..... 19
   6.5 Subsequent Attachment to a Different Tractor ..... 19
7. Operation ..... 20
   7.1 Operator Guard ..... 20
   7.2 Preparation ..... 20
   7.3 Machine Controls ..... 21
   7.4 Breakaway ..... 21
   7.5 Moving into the Transport Position ..... 22
   7.6 Transport Position-Rear Mounted Machines ..... 23
   7.7 Transport Position with Flail head Removed ..... 24
   7.8 Transport ..... 24
   7.9 Transport Height ..... 24
   7.10 Moving from Transport to Work Position ..... 25
   7.11 Engaging Drive ..... 25
   7.12 Rotor Operating Speed ..... 25
   7.13 Tractor Forward Speed ..... 26
   7.14 High Voltage Cables ..... 26
   7.15 Overhead Obstructions ..... 26
   7.16 Hedge Cutting Procedure ..... 27
   7.17 Working on Adverse Slopes ..... 28
8. Maintenance ..... 29
   8.1 Lubrication ..... 29
   8.2 Hydraulic System ..... 30
   8.3 Hydraulic Hoses ..... 30
9. Exploded View and Parts List ..... 31

# 1. Safety Information

This machine has the potential to be extremely dangerous, in the wrong hands it can kill or maim. It is therefore imperative that the owner, and the operator of this machine, read the following section to ensure that they are both fully aware of the dangers that do, or may exist, and their responsibilities surrounding its use.

The operator of this machine is responsible not only for their own safety but equally for the safety of others who may come into the close proximity of the machine, as the owner you are responsible for both.

### 1.1 Potential Significant Dangers Associated with the Use of This Machine

- Being hit by debris thrown by rotating components.
- Being hit by machine parts ejected through damage during use.
- Being caught on a rotating power take-off (PTO) shaft.
- Being caught in other moving parts i.e.: belts, pulleys and cutting heads.
- Electrocution from Overhead Power Lines (by contact with or 'flashover' from).
- Being hit by cutting heads or machine arms as they move.
- Becoming trapped between tractor and machine when hitching or unhitching.
- Tractor overbalancing when machine arm is extended.
- Injection of high pressure oil from hydraulic hoses or couplings.
- Machine overbalancing when freestanding (out of use).
- Road traffic accidents due to collision or debris on the road.

### 1.2 Before Using This Machine You Must

- Ensure you read all sections of the operator handbook.
- Ensure the operator is, or has been, properly trained to use the machine.
- Ensure the operator has been issued with and reads the operator handbook.
- Ensure the operator understands and follows the instructions in operator handbook.
- Ensure the tractor front, rear and side(s) are fitted with metal mesh or polycarbonate guards of suitable size and strength to protect the operator against thrown debris or parts.
- Ensure tractor guards are fitted correctly, are undamaged and kept properly maintained.
- Ensure that all machine guards are in position, are undamaged, and are kept maintained in accordance with the manufacturer's recommendations.
- Ensure flails and their fixings are of a type recommended by the manufacturer, are securely attached and that none are missing or damaged.
- Ensure hydraulic pipes are carefully and correctly routed to avoid damage by chafing, stretching or pinching and that they are held in place with the correct fittings.
- Always follow the manufacturer's instructions for attachment and removal of the machine from the tractor.

- Check that the machine fittings and couplings are in good condition.
- Ensure the tractor meets the minimum weight recommendations of the machine manufacturer and that ballast is used as necessary.
- Always inspect the work area thoroughly before starting to note obstacles and remove wire, bottles, cans and other debris.
- Use clear suitably sized warning signs to alert others to the nature of the machine working within that area. Signs should be placed at both ends of the work site.
- Ensure the operator is protected from noise. Ear defenders should be worn and tractor cab doors and windows must be kept closed. Machine controls should be routed through proprietary openings in the cab to enable all windows to be shut fully.
- Always work at a safe speed taking account of the conditions i.e.: terrain, highway proximity and obstacles around and above the machine.
- Pay special attention to overhead power lines. Some of our machines can reach in excess of 8 m (26 ft), which means they can potentially exceed, by up to 3 m (9 ft 9 in), the lowest legal minimum height of 5.2 m (17 ft) above ground for 11,000 V and 33,000 V power lines. It cannot be stressed enough the dangers that surround this capability, it is therefore vital that the operator is fully aware of the maximum height and reach of the machine, and that they are fully conversant with all aspects regarding the safe minimum distances that apply when working with machines in close proximity to Power Lines.
- Always disengage the machine, kill the tractor engine, remove and pocket the key before dismounting for any reason.
- Always clear up all debris left at the work area, it may cause hazard to others.
- Always ensure when you remove your machine from the tractor that it is left in a safe and stable position using the stands and props provided and secured if necessary.

**1.3 When Not to Use This Machine**

- Never attempt to use this machine if you have not been trained to do so.
- Never use a machine until you have read and understood the operator handbook, are familiar with, and have practiced the controls.
- Never use a machine that is poorly maintained.
- Never use a machine if guards are missing or damaged.
- Never use a machine on which the hydraulic system shows signs of wear or damage.
- Never fit, or use, a machine on a tractor that does not meet the manufacturer's minimum specification level.
- Never use a machine fitted to a tractor that does not have suitable front, rear and side(s) cab guarding made of metal mesh or polycarbonate.
- Never use the machine if the tractor cab guarding is damaged, deteriorating or badly fitted.
- Never turn a machine cutting head to an angle that causes debris to be ejected towards the cab.
- Never start or continue to work a machine if people are nearby or approaching - Stop and wait until they are at a safe distance before continuing. WARNING: Some Cutting Heads may continue to 'freewheel' for up to 40 seconds after being stopped.
- Never attempt to use a machine on materials in excess of its capability.
- Never use a machine to perform a task it has not been designed to do.
- Never operate the tractor or machine controls from any position other than from the driving seat, especially whilst hitching or unhitching the machine.

- Never carry out maintenance of a machine or a tractor whilst the engine is running – the engine should be switched off, the key removed and pocketed.
- Never leave a machine unattended in a raised position – it should be lowered to the ground in a safe position on a level firm site.
- Never leave a tractor with the key in or the engine running.
- Never carry out maintenance on any part or component of a machine that is raised unless that part or component has been properly substantially braced or supported.
- Never attempt to detect a hydraulic leak with your hand – use a piece of cardboard.
- Never allow children near to, or play on, a tractor or machine under any circumstances.

# 2. Specifications

| Model | TAT35 | TAT47 |
|---|---|---|
| Tractor power | 20-50 HP | 20-50 HP |
| PTO speed | 540 rpm | 540 rpm |
| Working width | 35” (900 mm) | 47” (1200 mm) |
| Max. cutting diameter | 3/8” (10 mm) | 3/8” (10 mm) |
| Max reach | 106” (2710 mm) | 106” (2710 mm) |
| Head angle | 176° | |
| Number of cutting discs | 3 | |
| Material of cutting discs | Tungsten carbide tipped steel | |
| Max operating pressure | 2300 psi (16 MPa) | |
| Hydraulic flow | 13.2 GPM (50 L/Min) | |
| Hydraulic oil | HM-46 (ISO VG 46), 17 US gal (65 L) | |
| Gearbox oil | SAE90 | |

# 3. Initial Attachment to Tractor

The machine will be delivered in a partially dismantled condition, secured with transport strap and banding.

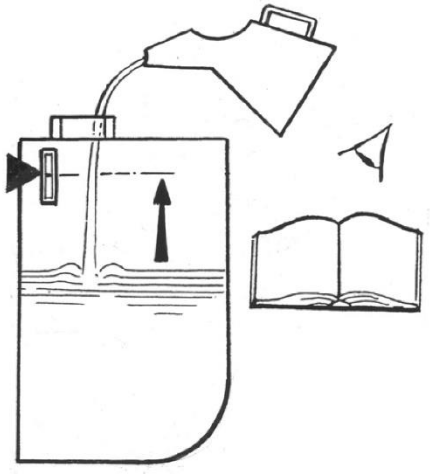

- Choose a firm level site.
- Remove the transport strap, banding straps and loose items.
- Raise the machine using overhead lifting equipment with a minimum capacity of 1500kg SWL.

  **Leave in position at this stage.**
- Lower the legs and pin in position selecting the holes that position the machines gearbox stub shaft approx.

  75 mm below the tractors P.T.O. shaft.

  **Note: Leg pin position used.**
- Unbolt stabilizer from machine and remove the stabilizer nose quadrant pin.

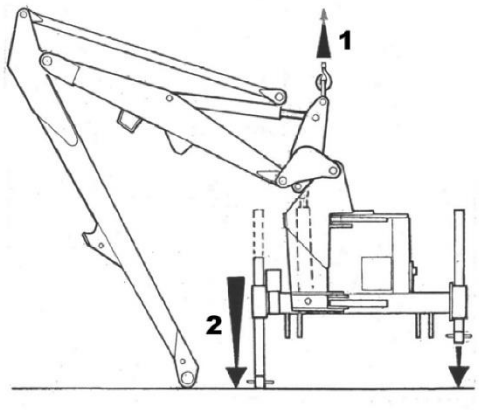


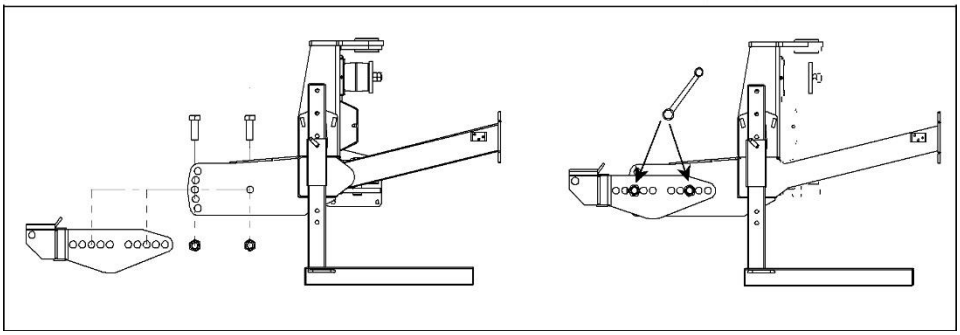

Locate axle-mounting arms onto the mainframe and secure in position using the correct nuts and bolts supplied, tighten nuts when correct hole location has been selected - see following page for details on mounting hole selection.

### 3.1 Axle Bracket / Catch Assembly-Fitting by Dealer

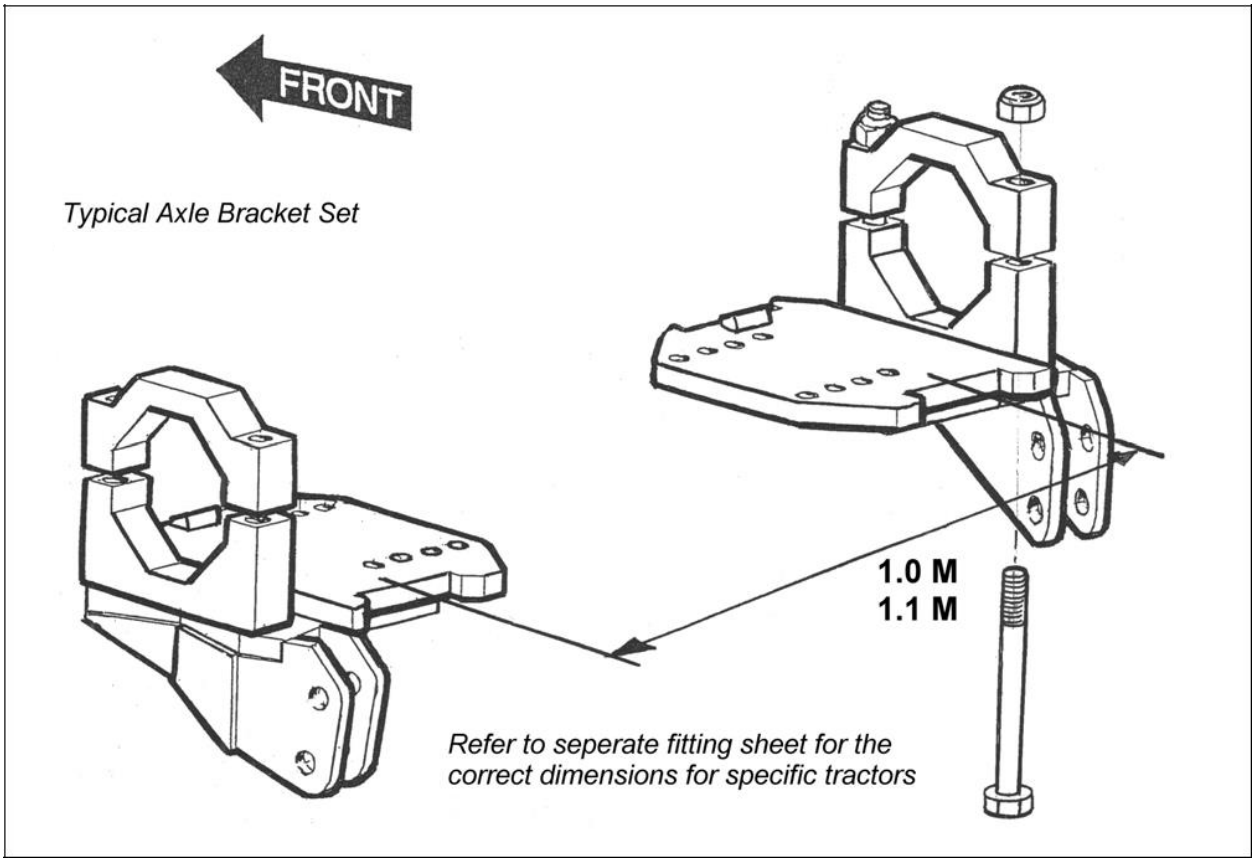


Bolt axle plates to the tractor axle at either 1.0 m or 1.1 m apart - this may necessitate the removal of the tractor's check chains and/or stabilizer ram brackets; if this is the case, the axle plate will include replacement brackets for these functions.

The axle brackets supplied will be accompanied by a fitting sheet with instructions for their attachment to your tractor; follow the instructions exactly, as they are specific to your particular make and model of tractor. Replace the stabilizer ram(s) if fitted.

Hook the catch assemblies onto the rear of the axle plates, push firmly against the plate and vigorously pivot the catch in a forward and up direction until the spring loaded hook 'snaps' into position. Pass the release cords up into the cab.

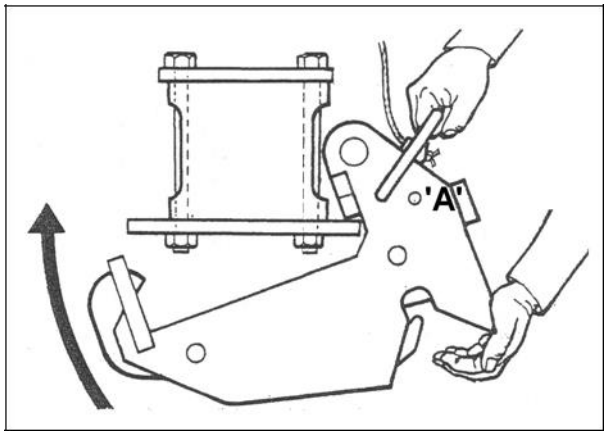


Ensure catch-locking pin 'A' is removed.

**NOTE:**

On some tractors fitted with auxiliary fuel tanks, there is insufficient space for the spring catches to be fitted, in these instances special axle brackets and catches with a ‘pin on' facility are available on request.

### 3.2 Standard Type Brackets

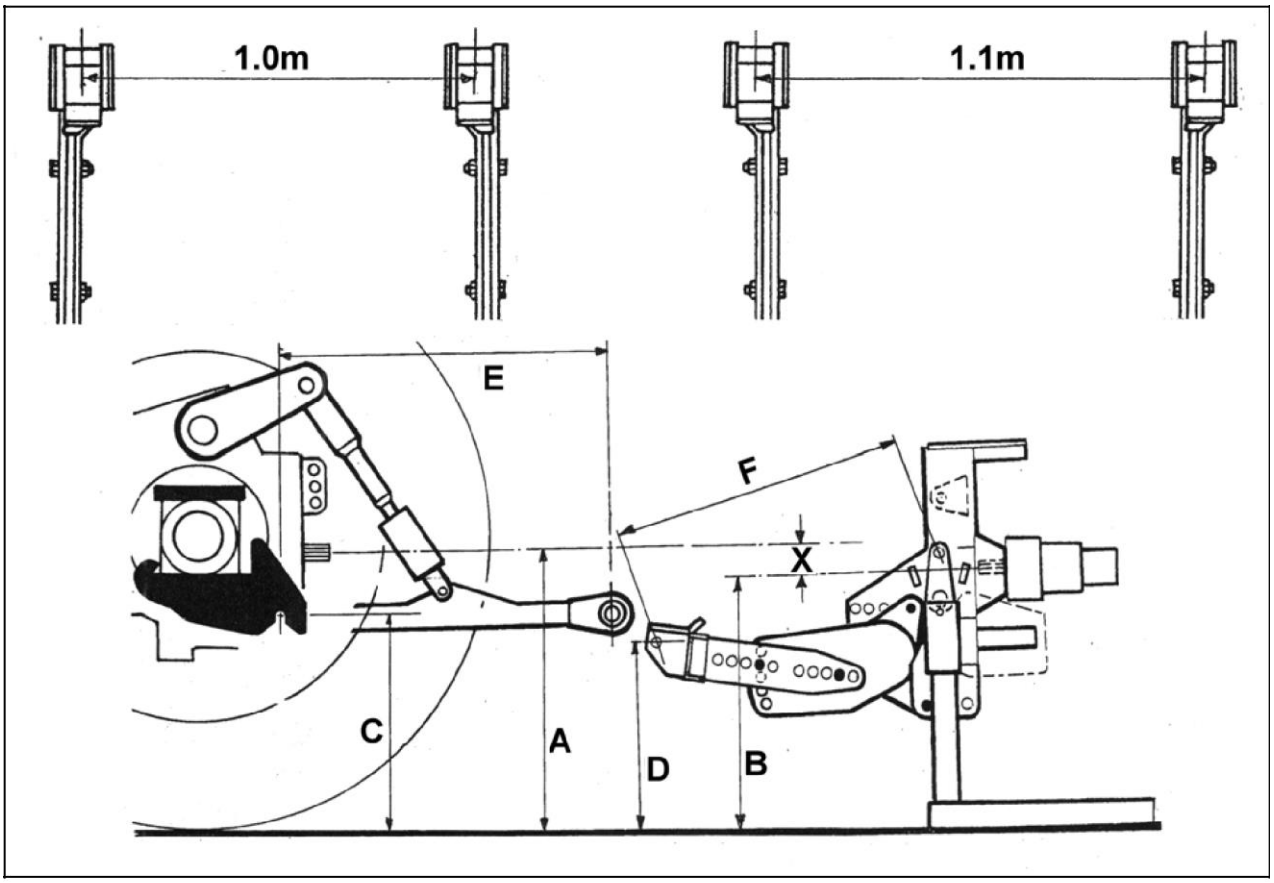


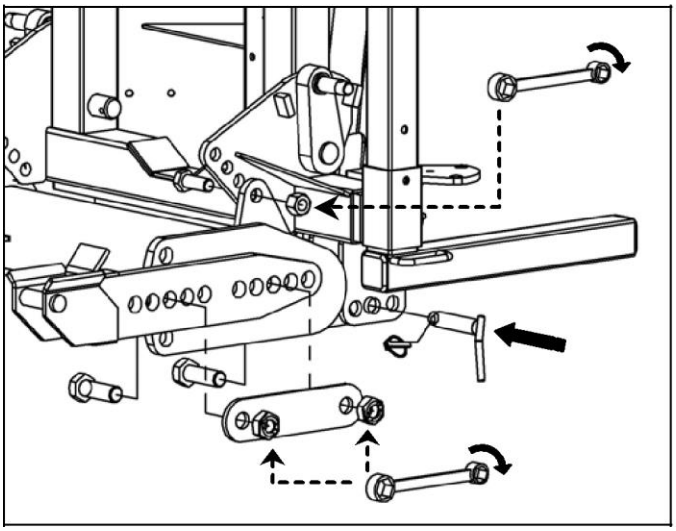

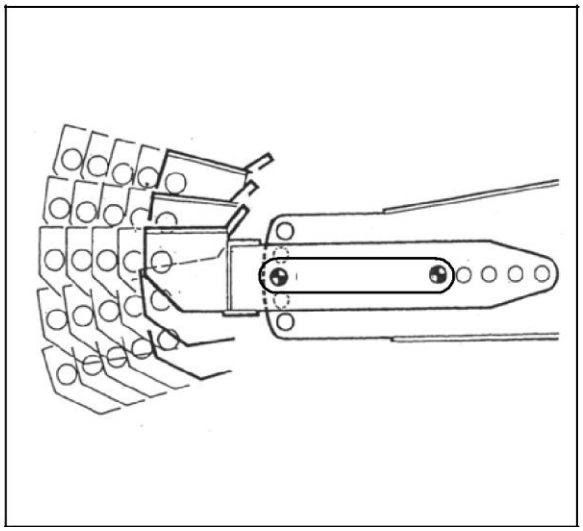

With the frame in the vertical position, measure dimensions 'A' and 'B', subtract 'B' from 'A' to obtain measurement 'X'. Measure dimension 'C'.

Select mounting holes which position the mounting bars in the end of the latch arms so that dimension 'D' equals dimension 'C' minus measurement 'X' and also when the draft link is horizontal and the rocking draft pin is in the upright position dimensions 'E' and 'F' are equal.

### 3.3 Alternative Type Brackets

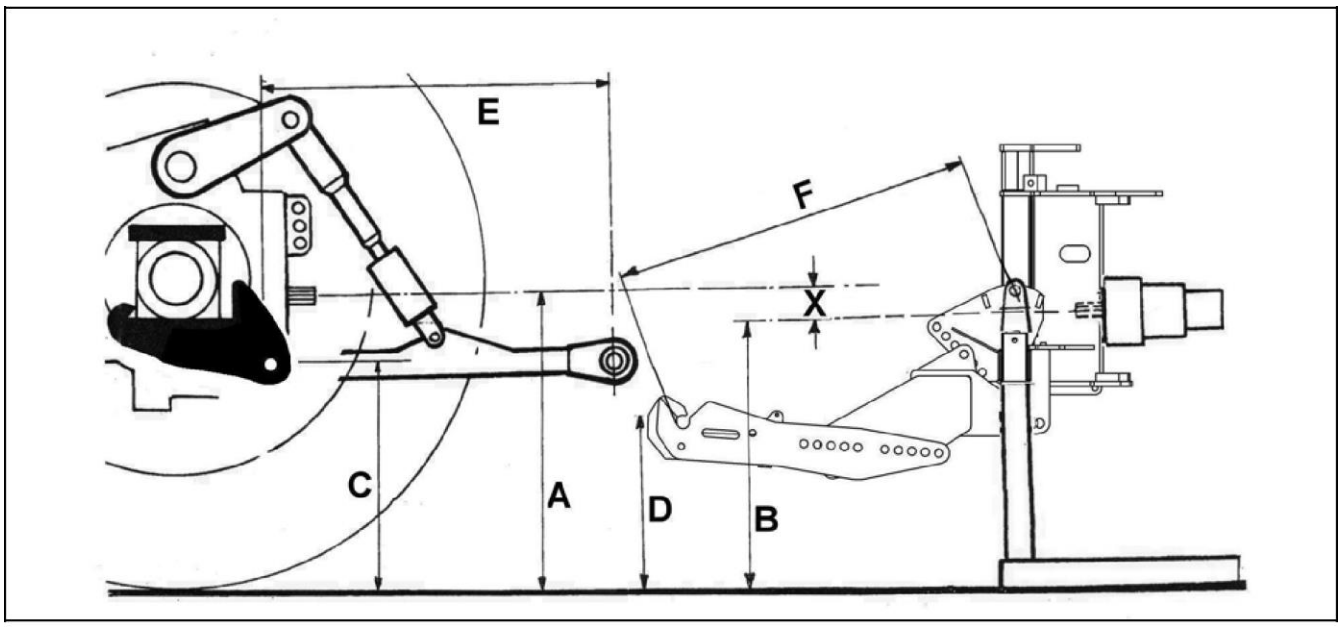


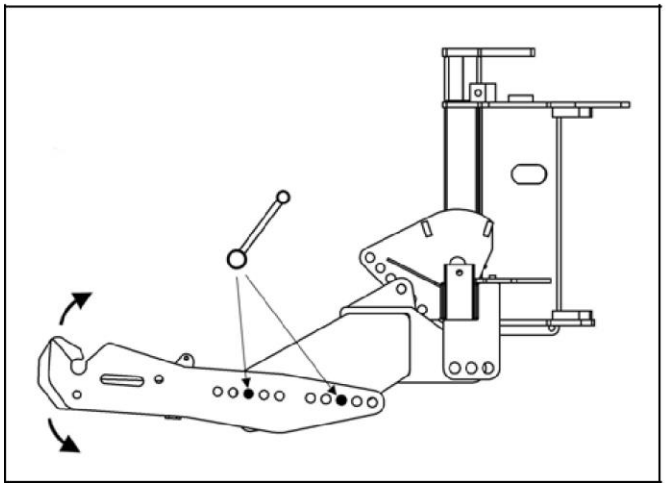

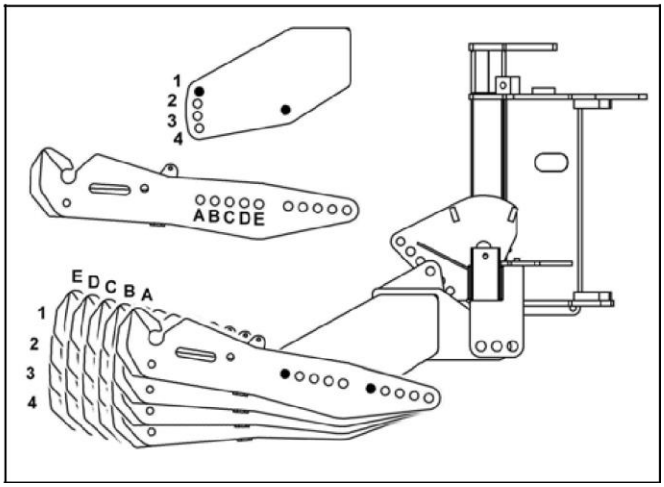


With the frame in the vertical position, measure dimensions 'A' and 'B', subtract 'B' from 'A' to obtain measurement 'X'. Measure dimension 'C'.

Select mounting holes which position the mounting bars in the end of the latch arms so that dimension 'D' equals dimension 'C' minus measurement 'X' and also when the draft link is horizontal and the rocking draft pin is in the upright position dimensions 'E' and 'F' are equal.

### 3.4 Tractor Attachment-by Customer or Dealer

Reverse the tractor squarely into position adjacent to the machine and connect the draft links to the machine - maneuver tractor until both draft pin rockers are vertical.

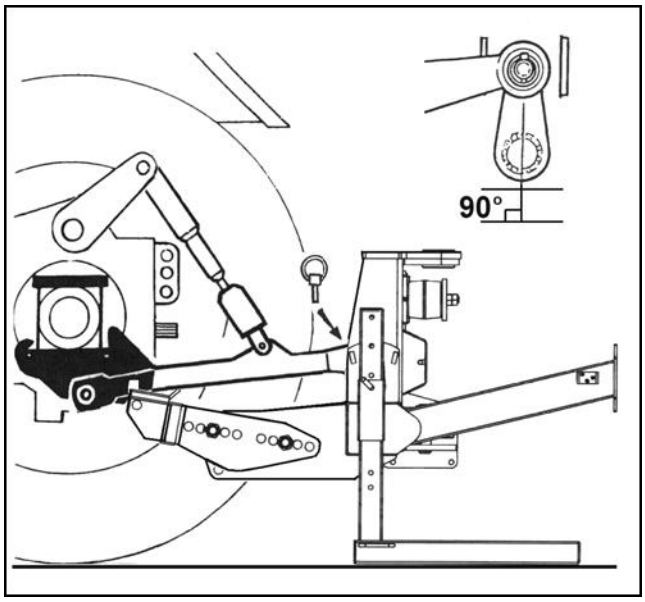


Raise the machine on the tractor's linkage sufficient only for the latch bar to fully engage in the axle catch.

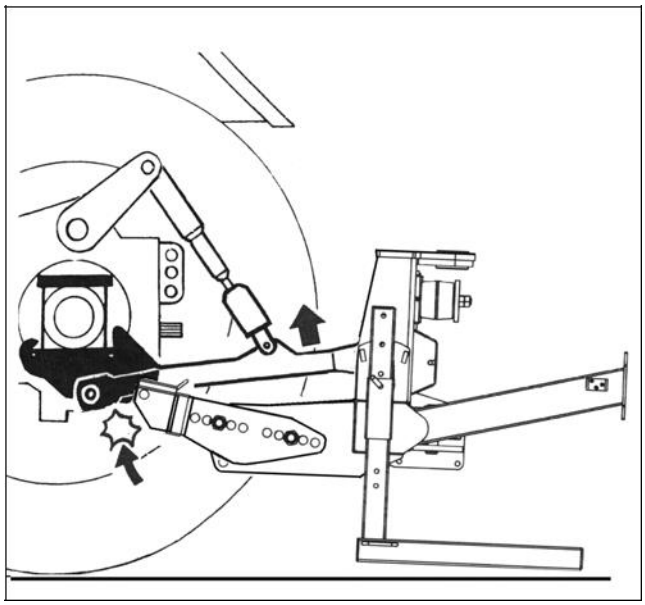

**WARNING**

The quadrant lever or machine controls must only be operated from the tractor seat. Ensure no one is standing close to or within the linkage arms or bars.

**NOTE:**

Be aware - as lift occurs the machinery may tilt slightly.

Insert catch lock pins-refer to diagrams below for specific type

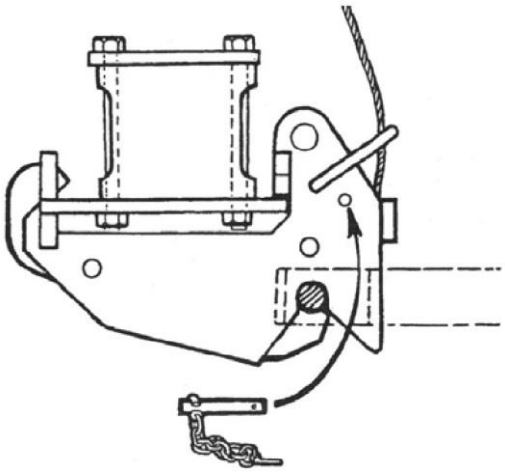

Standard Type Bracket

**Locking Pins on this type of bracket pass through the arms above the latches and are secured with linch pins.**

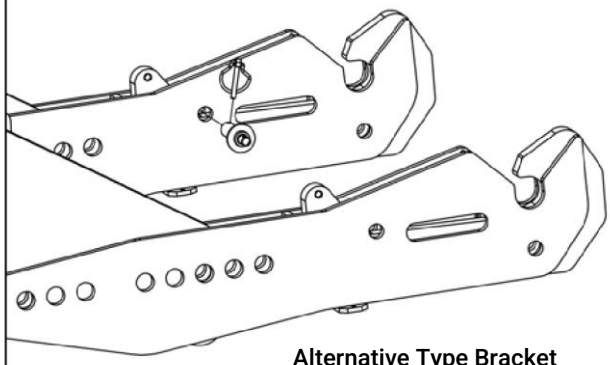

Alternative Type Bracket

Raise the machine on the tractors linkage until the frame is vertical.

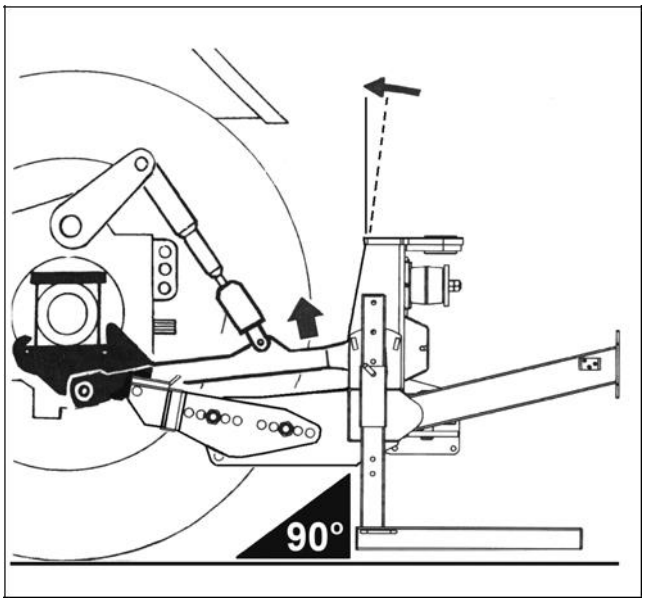


Fit top link.

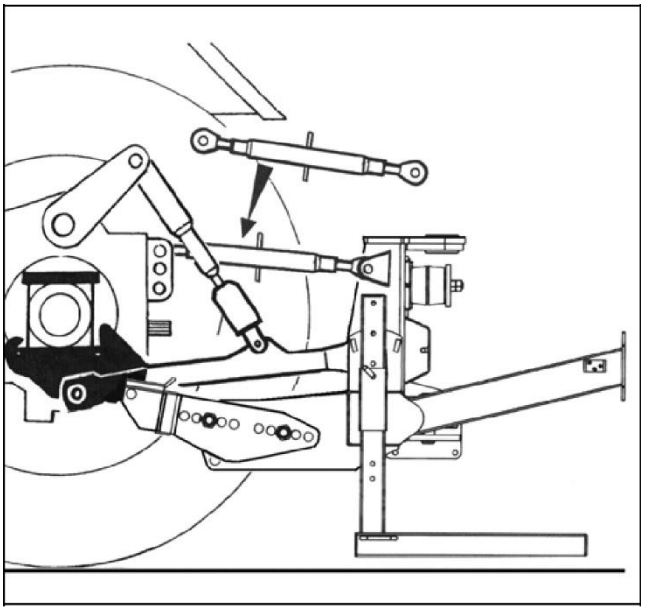

Measure PTO shaft and cut to dimension shown (distance 'A' minus 75mm) - see diagram opposite and refer to maintenance section for further details.

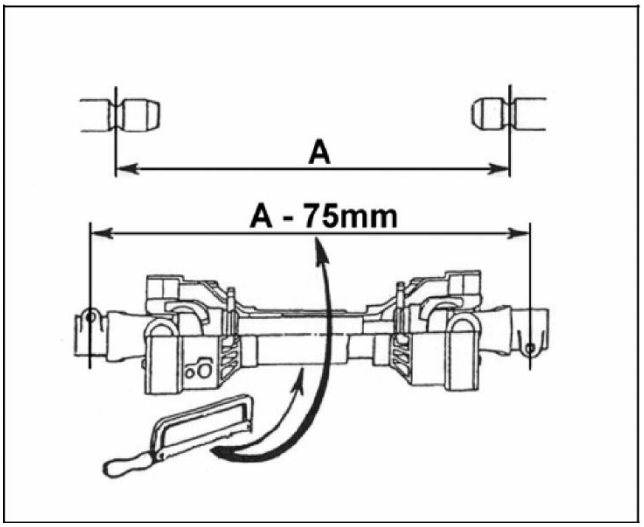


**NOTE:**
For subsequent use on a different tractor measure again - there must be a minimum of 6" (150mm) of shaft overlap.

Fit PTO shaft into position.

Attach the torque chains to a convenient location to prevent rotation of the shaft guards.

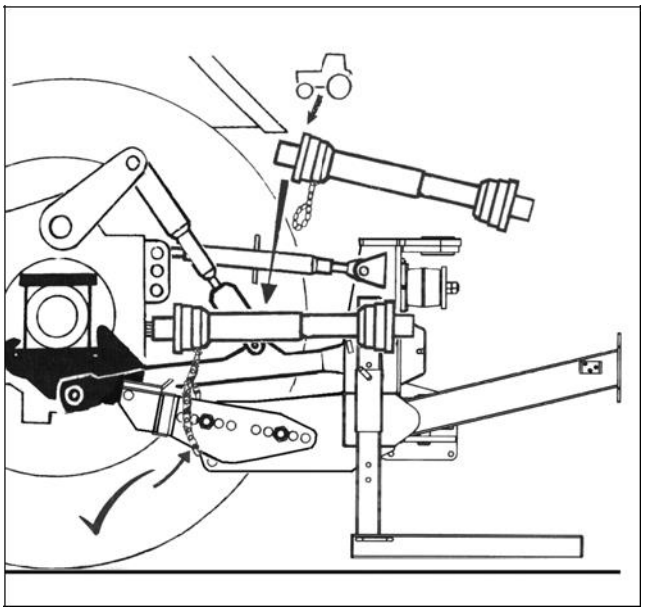

Fit machine controls into the cab - refer to the specific page on this subject for further details.

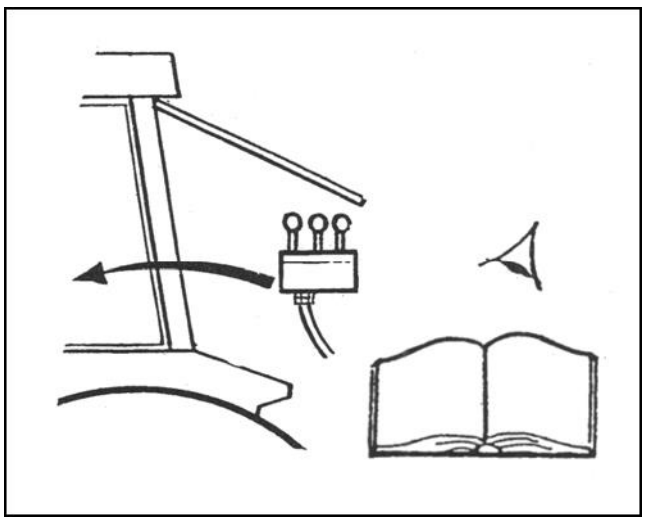

**First Fitting Only – for Dealer Reference**

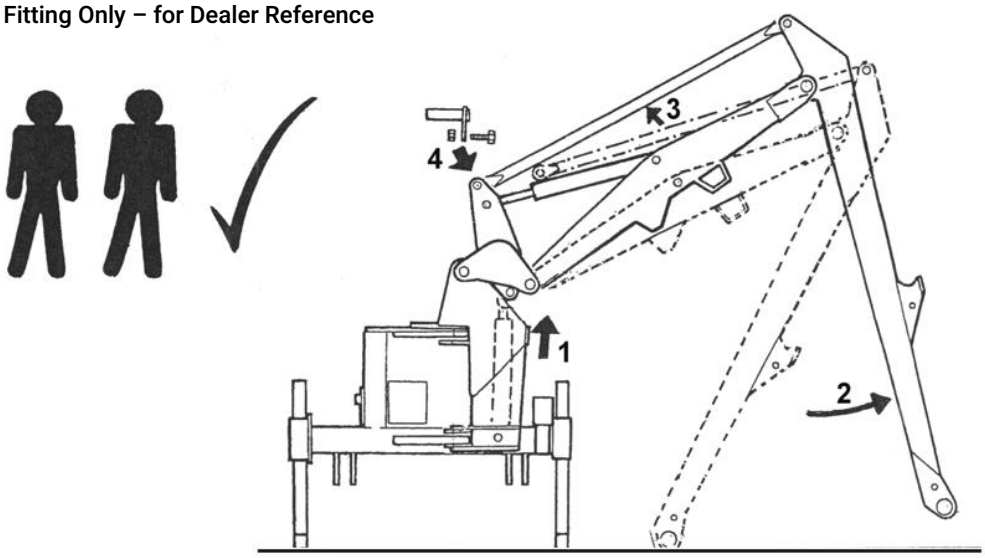


Request assistance. Operate 'Lift up' on machine controls sufficient only for the dipper arm to clear the ground. Pivot out the dipper until the tension link can be reconnected.

Raise the stand legs into the work position and secure with their pins - see diagram opposite.

Tighten check chains and/or stabilizer bars.

The machine should now be carefully operated throughout its full range of movements to check hoses are not being strained, pinched, chafed or kinked, and that all movements are functioning correctly.

The machine can now be folded into the transport position ready to proceed to the work site - Refer to the section on Transport Position for details on this subject.

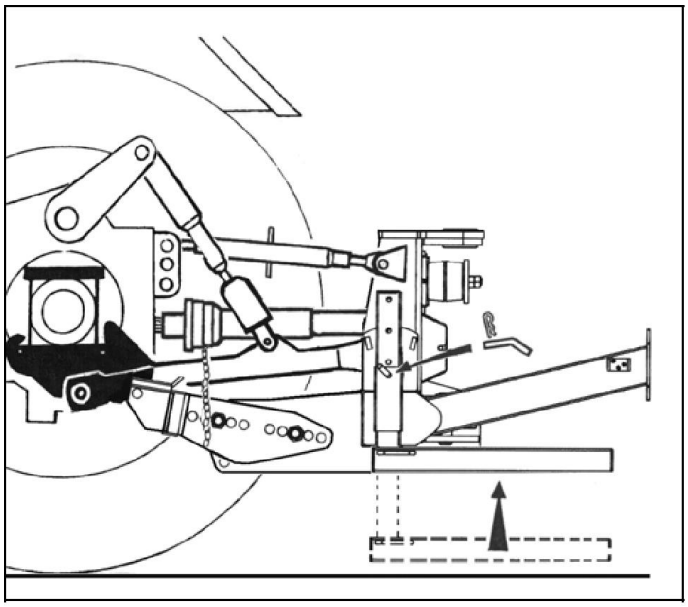

# 4. Removal from Tractor

Select a firm safe site to remove the machine

Locate parking legs into their housings.

NOTE: The correct, and most stable, position for removing the machine from the tractor is with the arm positioned to the rear of the machine.

Position the flail head on the ground directly to the rear of the machine at approximately half reach.

Disengage PTO.

Remove latch security pins.

Take machine weight on draft links sufficient only to allow the top link to be disconnected.

Open axle catches using the release cord and lower the machine.

Disconnect draft links and remove the PTO shaft.

Remove control units from the tractor cab and stow clear of the ground in a location where they are protected from the weather or risk of accidental damage.

Drive tractor away from machine.

Replace check chains / stabilizer bars-The axle plates can remain permanently in position.

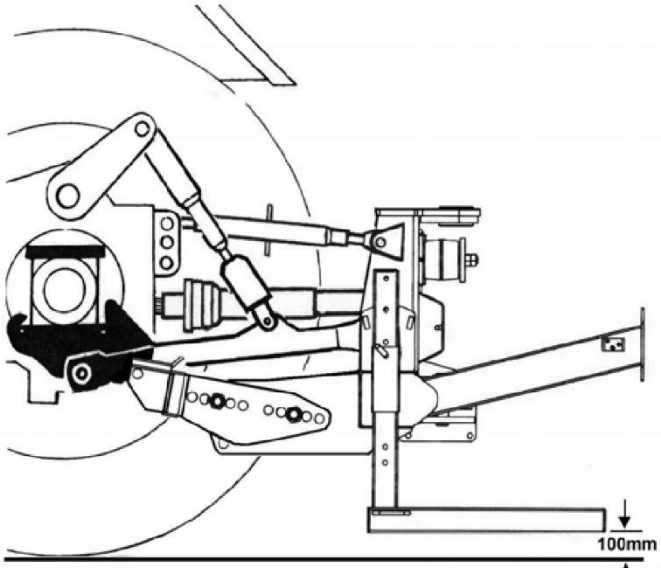


**Locate parking legs into their housings.**

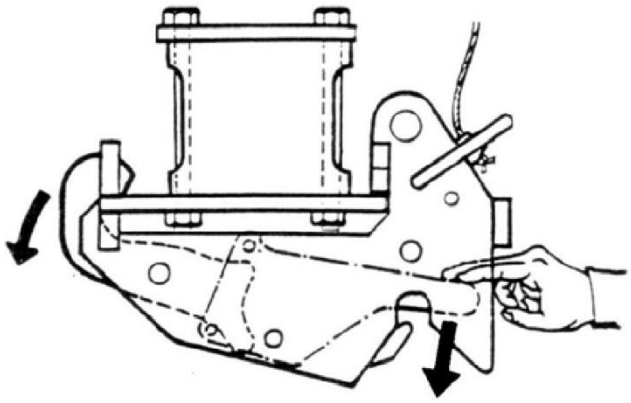

**Remove the axle catches from the tractor.**

# 5. Storage

If the machine is to be left standing for extended periods of time, lightly coat the exposed portions of the ram rods with grease. Subsequently this grease should be wiped off before the rams are next moved. If the machine is to be stored outside tie a piece of tarpaulin or canvas over the control assembly - do not use a plastic bag as this can lead to corrosion

# 6. Tractor Attachment-Linkage Mounted Machines

- With the machine positioned on a firm level site and securely supported, maneuver the tractor squarely up to the machine with the tractor's draft links set to a height level with the machines lower link brackets.
- Connect the tractor's draft links to the machine's lower link brackets, retain in position with the linkage and linch pins supplied. Ensure that the same

'Hole position' is selected on each side of the machine.

NOTE: The hole selected on the lower link bracket should be the rear most that permits the machine to be mounted without fouling the tractor.

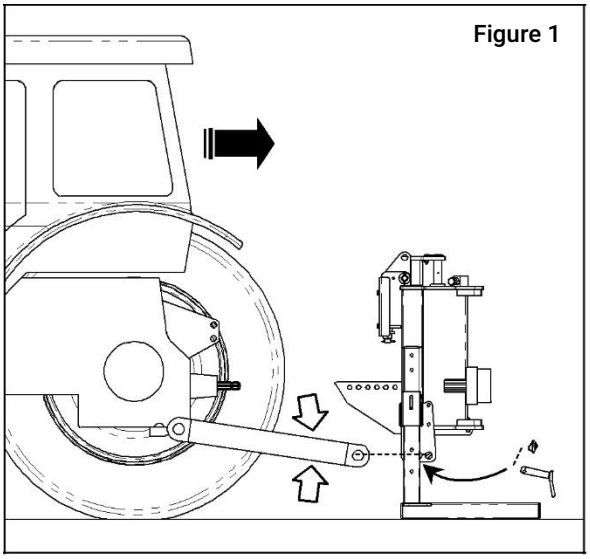

Figure 1

Lifting equipment may now be removed.

- Fit and secure stabilizer nose into the tractors top link selecting the highest position available avoiding any load sensing properties.

  NOTE: The bolt on nose of the stabilizer is reversible in order to accommodate variations of tractor linkage designs.

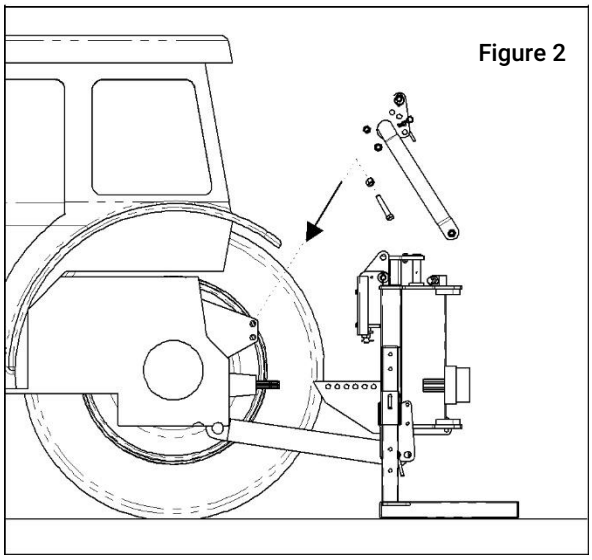

Figure 2

Remove the 'R' clip and quadrant pin from stabilizer and swing it rearwards to locate with one of the holes on the mainframe - select the hole that is furthest away from the tractor and secure loosely with the bolt provided.

Do not tighten at this stage and do not replace quadrant pin at this stage.

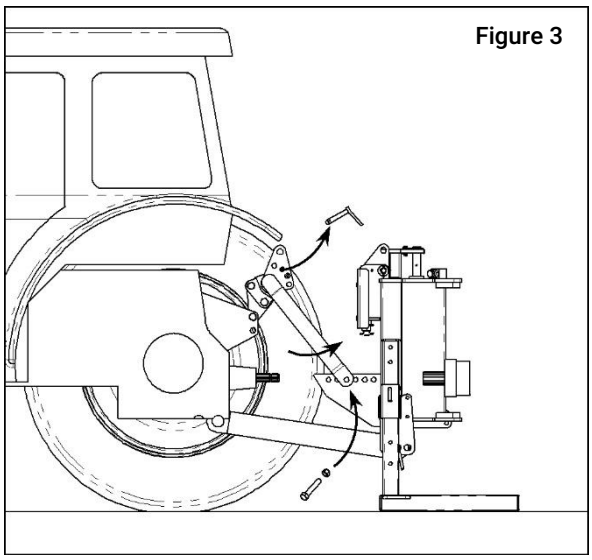

Figure 3

- Fit the machines top link.
- Raise the machine on the tractors linkage to a position where the tractor.

  PTO and the machines gearbox stub shaft are approximately in line with each other. Note: As lift occurs be aware the machine may tilt slightly.

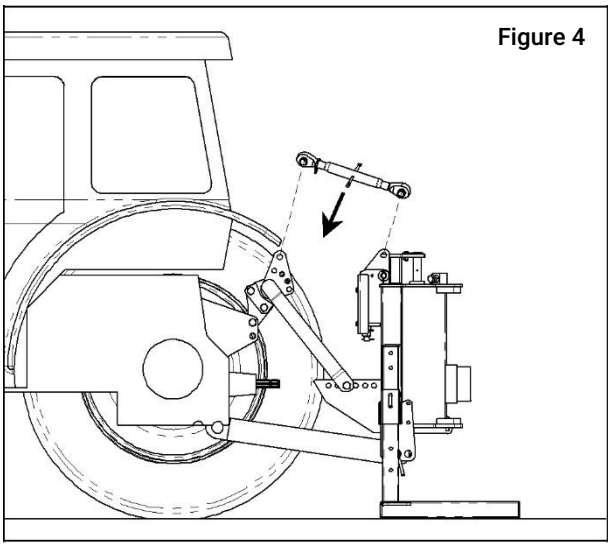
Figure 4

**WARNING**

The quadrant lever or machine controls must be operated from the tractor seat. Ensure no one is standing on or between the linkage arms or bars.

- Replace the stabilizer quadrant pin and secure with the 'R' clip.

NOTE: The quadrant pin must be fitted in the lowest hole on the stabilizer in order that it acts as a 'bottom stop' - this will prevent the machine from dropping when stopped and allow the tractor's built-in transport protection system to function correctly during operation and transportation.

Ensure the tractor's linkage is in 'position control' and the linkage raised sufficiently to hold the hedge cutter at the correct height and remove the load from the quadrant pin.

Never fit the quadrant pin in a location hole that locks the stabilizer as this can cause damage to the machine and/or tractor.

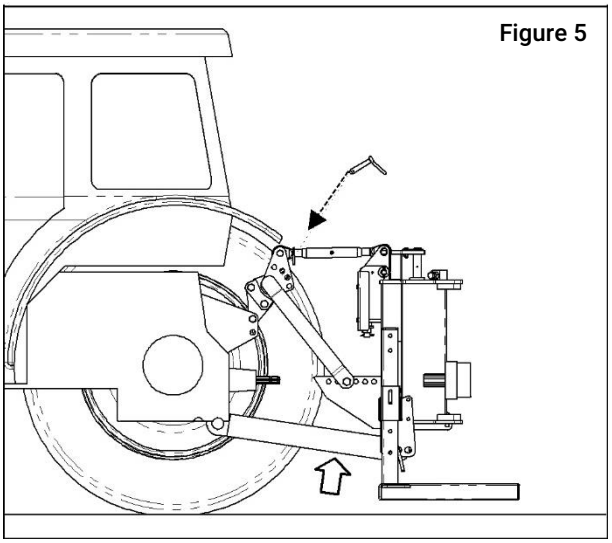
Figure 5

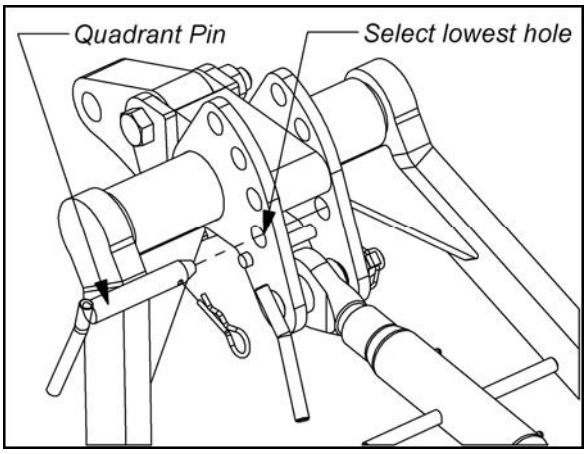

Adjust the top link to bring the machine frame into the vertical position.

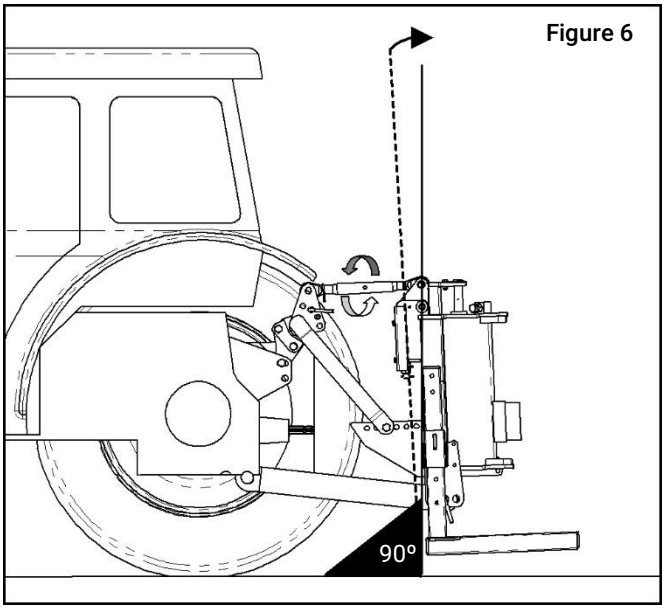

Figure 6

Fully tighten the stabilizer lower bolts

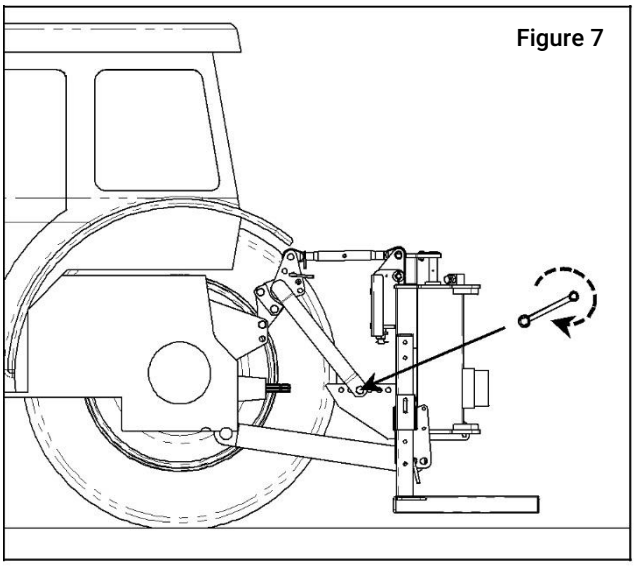
Figure 7

Measure the PTO shaft and cut to the dimension shown-the finished length of the PTO shaft should be 75mm (3”) less than the measured distance ‘A’ - between tractor shaft and gearbox stub shaft - to enable fitting.

**NOTE:**

For subsequent use with different tractors measure again, there must be a minimum shaft overlap of 150mm (6”).

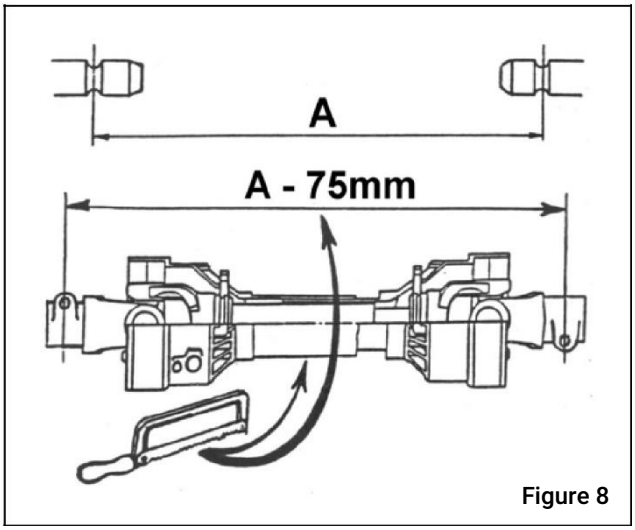

Figure 8

Fit PTO in position and attach the torque chains to a convenient location to prevent the shaft guards from rotating.

Figure 9

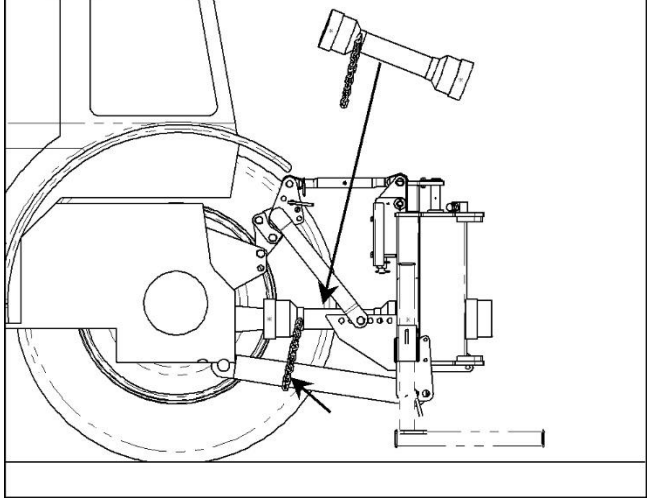

On semi-independent machines only connect up the supply and return hoses.

Supply-from tractors auxiliary service.

Return-to tractors transmission casing (refer to Tractors Handbook).

Fit the machine control unit into the tractor.

Figure 10

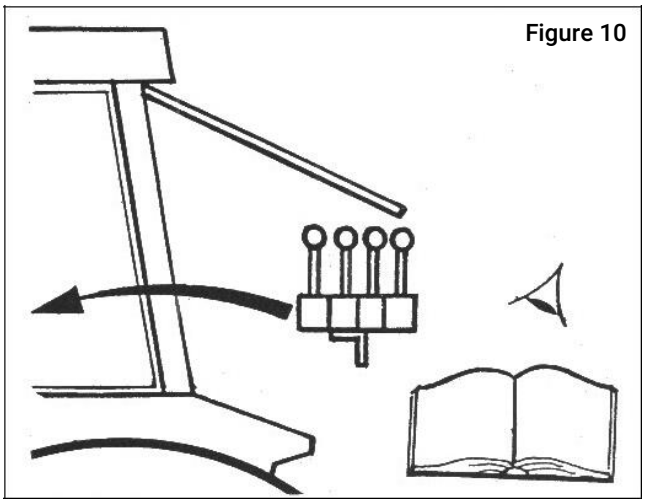

Note: On semi-independent machines only select tractors external services.

Ensure the Lift Ram tap and Slew Ram taps are open

Figure 11

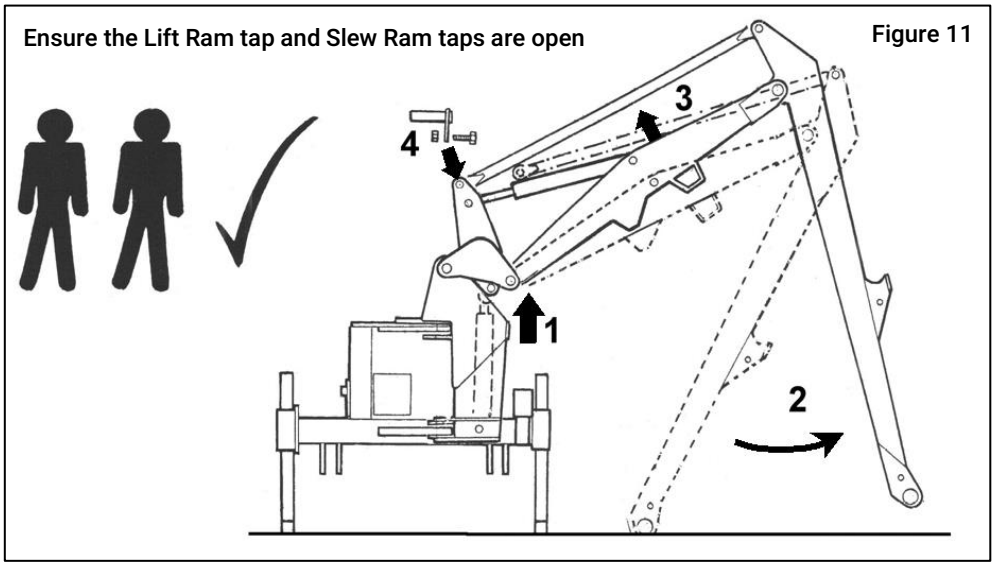

- Request assistance.
- Operate ‘lift up’ on machine controls sufficient only for the end of the dipper arm to clear the ground.
- Pivot out the dipper arm until the tension link can be connected.
- Operate the controls to ‘slew’ the arms towards the rear only until the frame is horizontal.
- Carefully operate the machine through its full range of movements whilst checking that hoses are not strained, pinched, chafed or kinked, and that all machine movements are functioning correctly.
- On initial installation, the machine is now ready for attachment of the flail head (see following page for fitting details).
- Fold the machine into the transport position. The machine is now ready to proceed to the work site.

**6.1 Flail head Attachment**

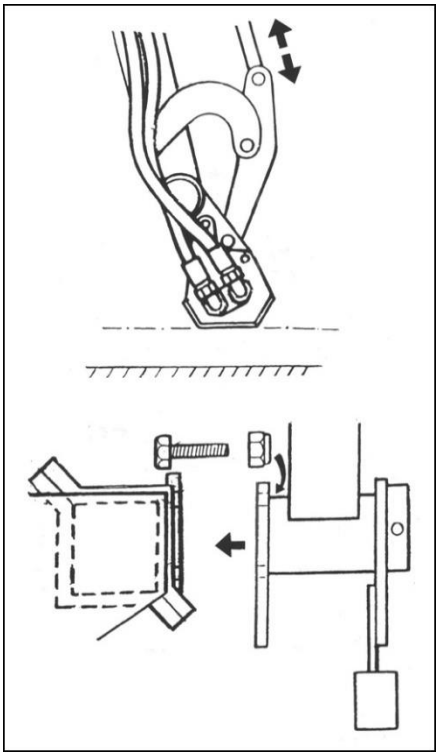

Operate the machine controls to maneuver into a position that allows attachment of the flail head-the bottom of the hose junction bracket must be parallel with the ground.

Refer to ‘Pre operational checks’ for correct bolt torque settings.

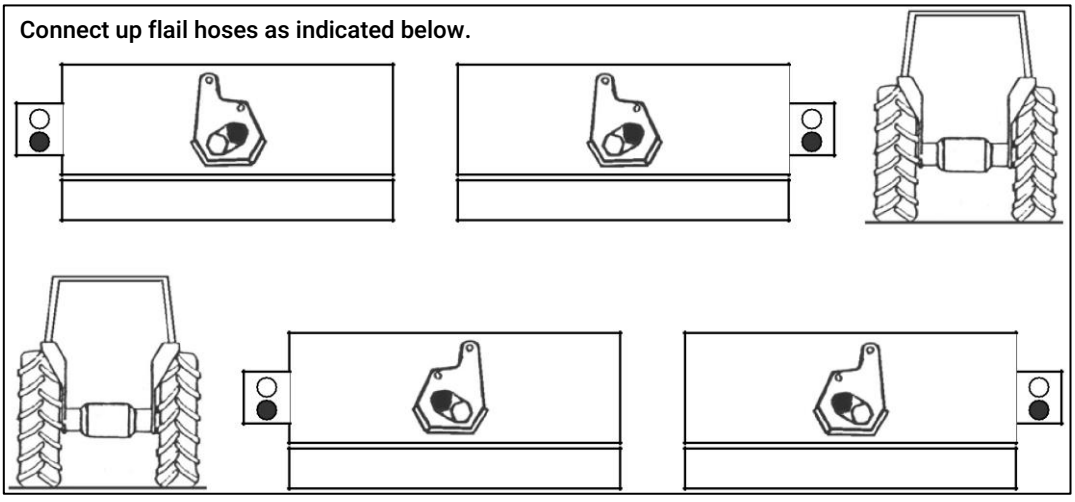


With the arms at half reach and the flail head clear of the ground carry out final adjustment of the lift arm levelling box to bring the main frame horizontal.

**6.2 Removal from Tractor**

**DANGER**

Read carefully before commencing, the order of the following steps must be followed exactly.

Disconnecting the top link must be the last operation prior to driving the tractor away from the machine.

**WARNING**

Do not operate quadrant lever or machine controls through the rear cab window whilst standing on or amongst linkage components. Always seek assistance.

- Select a firm level site for parking the machine.
- Replace parking legs in their sockets and secure in their lowest position.
- Raise the machine on the tractor linkage until the weight is taken off the stabilizer.
- Remove the lower stabilizer pins.
- Unscrew the lift ram tap.
- Lower the machine to the ground.
- Extend the arms and place the flail head on the ground at half reach.
- Disengage tractor P.T.O. and remove.
- Disconnect stabilizer bars or loosen check chains as applicable.
- Unbolt the control unit from the mounting pillar, remove from tractor cab and stow the levers or switchbox clear of the ground.
- Disconnect the stabilizer from the tractors top hitch position. Allow the stabilizer to slide along the rail until it contacts the eccentric stops.
- Remove draft link pins and drive tractor away from machine.

### 6.3 Storage

If machine is to be left standing for an extended period of time, lightly coat the exposed portions of the ram rods with grease. Subsequently this grease should be wiped off before the rams are next moved.

If the machine must be stored outdoors, tie a piece of tarpaulin or canvas over the control assembly; do not use a plastic bag, which could lead to rapid corrosion.

### 6.4 Subsequent Attachment to an Identical Tractor

Refer to and follow steps on ‘initial attachment to tractor’.

- Connect Stabilizer into tractors top hitch position used previously.
- Raise the machine on the tractor linkage until the Stabilizer contacts the eccentric stops.
- Fit Stabilizer lower pins.
- Mount controls in the tractor cab.
- Fit PTO Shaft and attach torque chain to a convenient point to prevent the shaft guard rotating.
- Place arms in work position at half reach and adjust lift arm leveling box to bring frame horizontal.
- Tighten Check Chains if fitted.
- Stow parking legs.
- Fold machine into transport position.
- Proceed to the work site.

### 6.5 Subsequent Attachment to a Different Tractor

Remove Stabilizer and Top Link from machine and separate.

Refer to and follow steps ‘initial attachment to tractor’.

# 7. Operation

**7.1 Operator Guard**

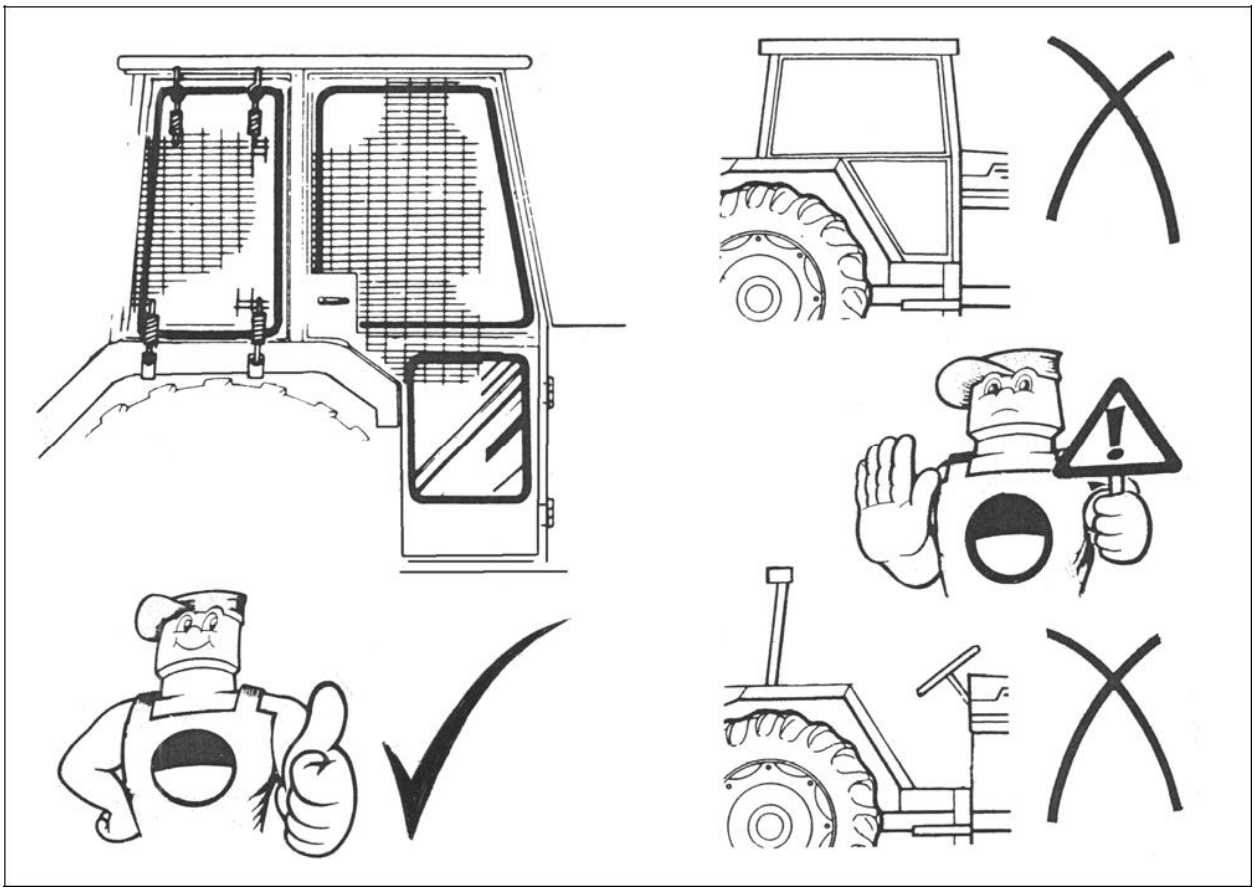

**7.2 Preparation**

READ THE BOOK FIRST Practice operating the machine in an open space without the rotor running until you are fully familiar with the controls and operation of the machine.

**CAUTION**

Care must be taken when working with the flail head close in as it can come into contact with the tractor.

### 7.3 Machine Controls

Cable controlled machines only.

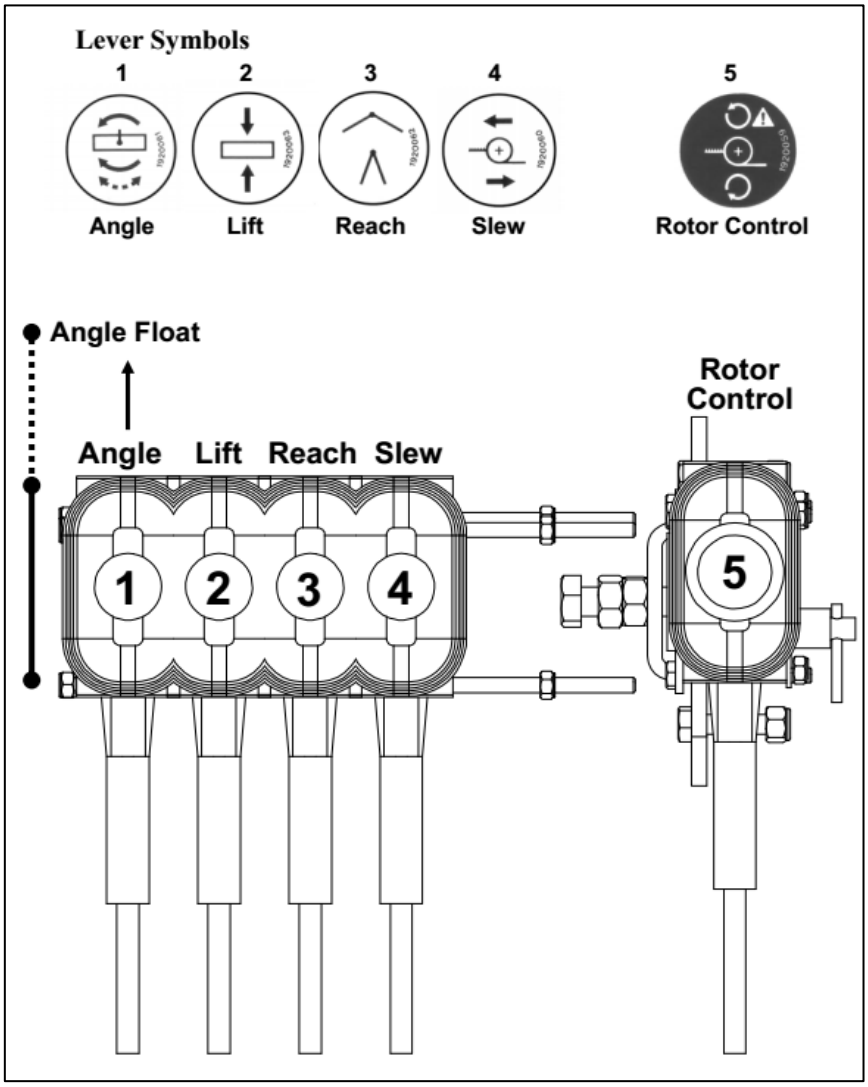


### 7.4 Breakaway

**NOTE:**

The breakaway function does not relieve the operator of his responsibility to drive carefully, be alert and avoid obvious hazards before contact occurs.

Breakaway may occur momentarily during normal work should an extra thick or dense patch of vegetation be encountered. In these instances, tractor forward motion may be maintained with care.

Where breakaway has occurred as a result of contacting a post or tree etc. the tractor must be halted and the controls of the machine utilised to manoeuvre the head away from the obstacle. Never continue forward motion to drag the head around.

**The obstacle in breakback position.**

**NOTE:**

The force required to activate the breakaway system will vary dependent upon the gradient of work. It will require less force when working uphill and vice versa.

On mid-cut machines the geometry of the breakaway will cause the head to initially move outwards in addition to rearwards. Therefore be aware that the breakaway action will be impeded if the outer end of the head is working against a steep bank. In this circumstance extra care must be taken during operation to avoid this occurrence.

**With 'AUTO RESET' selected:**

When the slew relief valve setting is exceeded oil is displaced from the slew ram into the base of the lift ram which causes the head to rise as the arm pivots backwards to clear the obstruction.

Resetting of the head into the work position occurs automatically.

**With 'SLEW' selected:**

When the slew relief valve setting is exceeded oil is displaced from the slew ram allowing the arm to pivot backwards horizontally and the obstacle to be cleared.

Re-setting the head into the work position is carried out manually by selecting 'SLEW OUT' on the control assembly

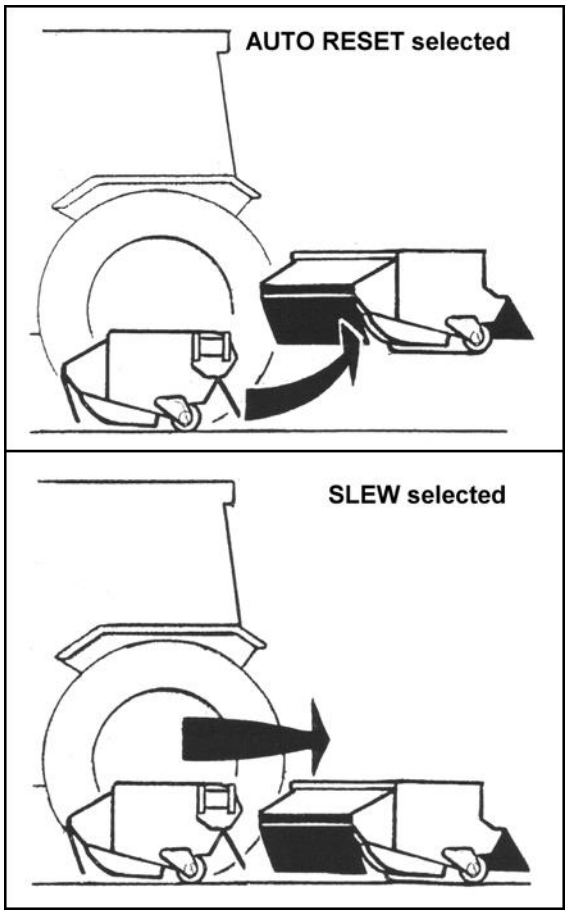


**7.5 Moving into the Transport Position**

Select ‘ROTOR OFF’ and wait until the rotor has stopped turning.

Ensure that the ‘lift’ and ‘angle float’

Select ‘SLEW’ mode on the control assembly.

Operate ‘SLEW IN’.

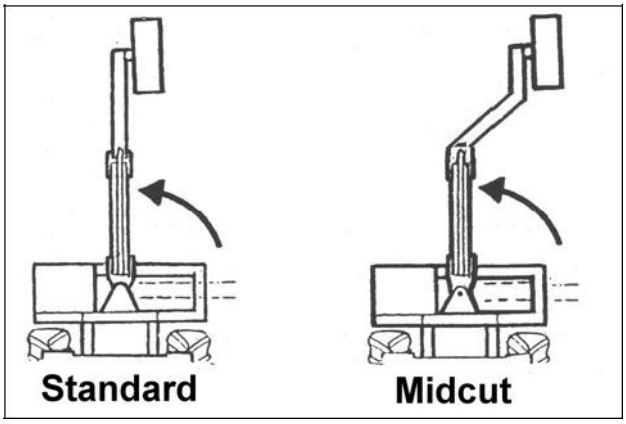


Operate ‘LIFT’ and ‘REACH’ to position the machine.

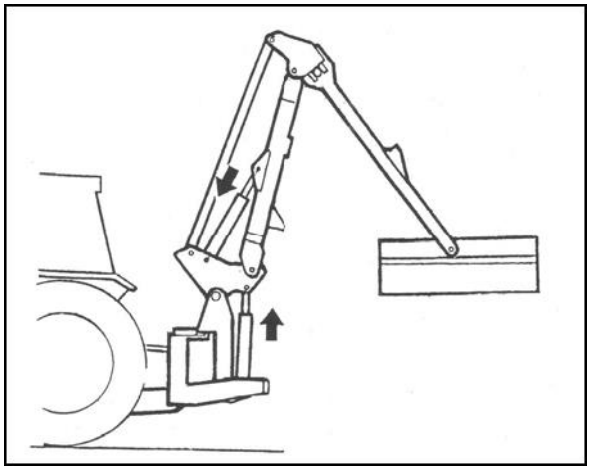

Operate ‘REACH IN’ until the dipper arm contacts the transport cradle.

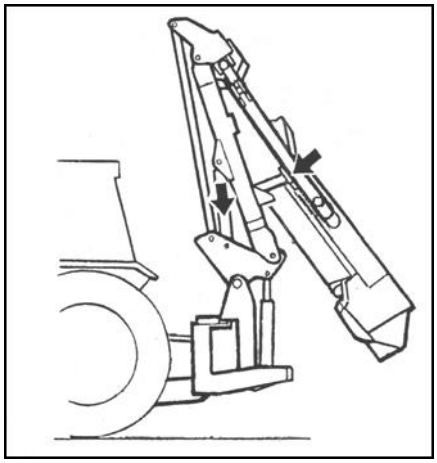

Select ‘LIFT UP’ and raise the arms until the tension link is 300mm from the tractor cab.

Operate ‘ANGLE’ and position the flail head in as compact position as possible.

Fully screw in the lift ram and slew ram taps.

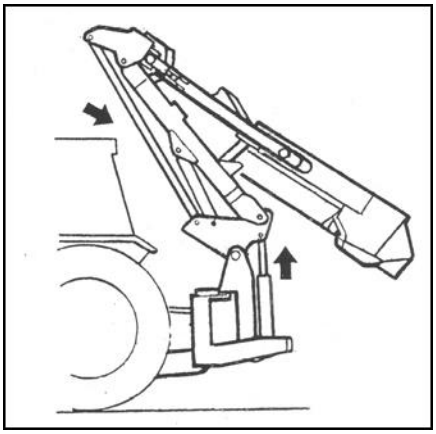

**7.6 Transport Position-Rear Mounted Machines**

The machine is transported in line to the rear of the tractor with a minimum of 300 mm clearance between the tension link and the rear cross member of the tractor cab.

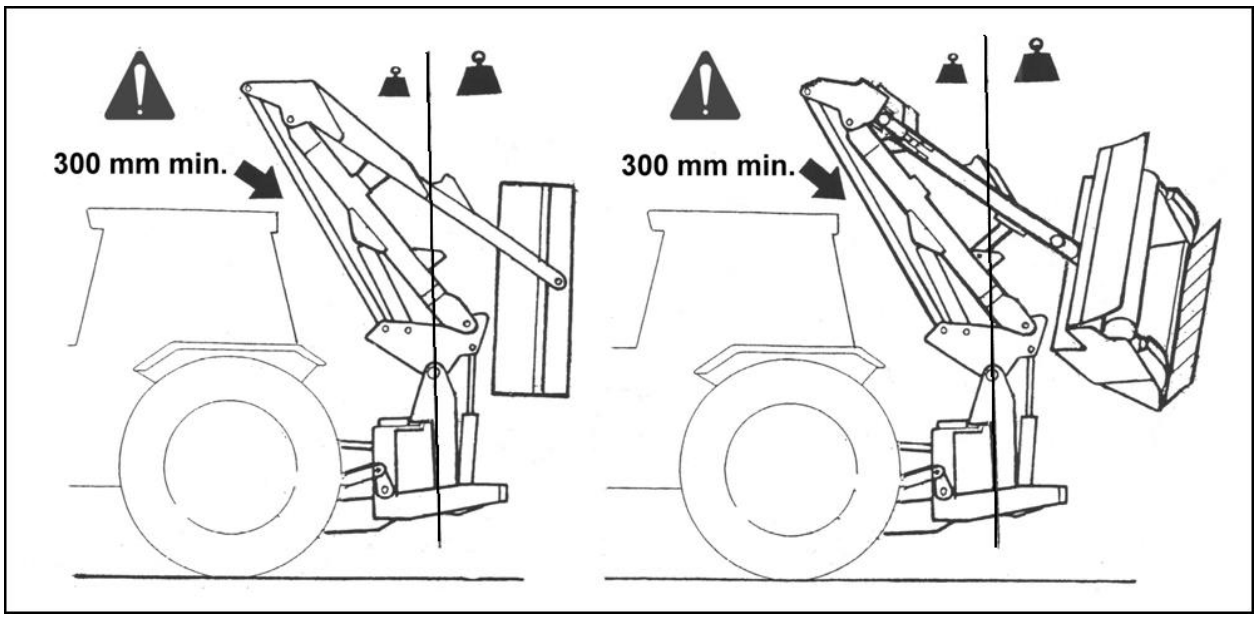

### 7.7 Transport Position with Flail head Removed

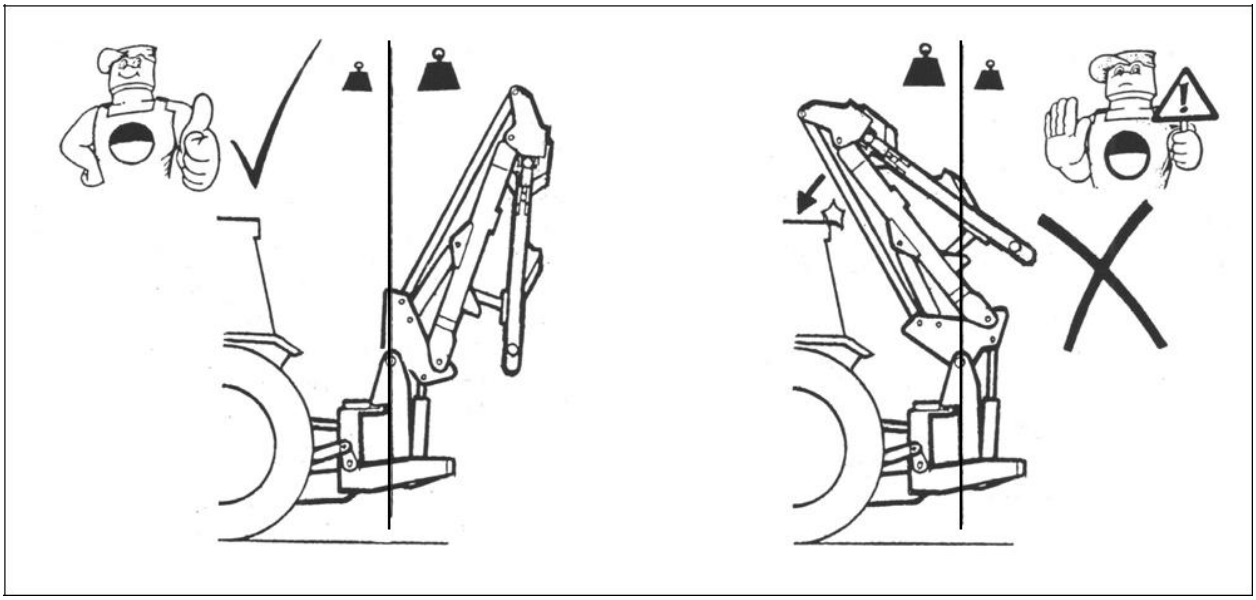

With the flail head removed, the arms are fully folded, with the lift ram fully retracted. If the lift ram is extended the weight of the arms will result in the balance of the machine to go “over center” causing the tension link to crash into the rear cross member of the tractor’s cab.

**WARNING**

During transport:

The 'SLEW’ mode must ALWAYS be selected on the control assembly.

### 7.8 Transport

When in transport the P.T.O. must be disengaged and the power to the control box switched off.

The acceptable speed of transport will vary greatly depending upon the ground conditions.

In any conditions avoid driving at a speed which causes exaggerated bouncing as this will put unnecessary strain on the tractors top hitch position and increase the likelihood of the tension link contacting the cab rear cross member.

### 7.9 Transport Height

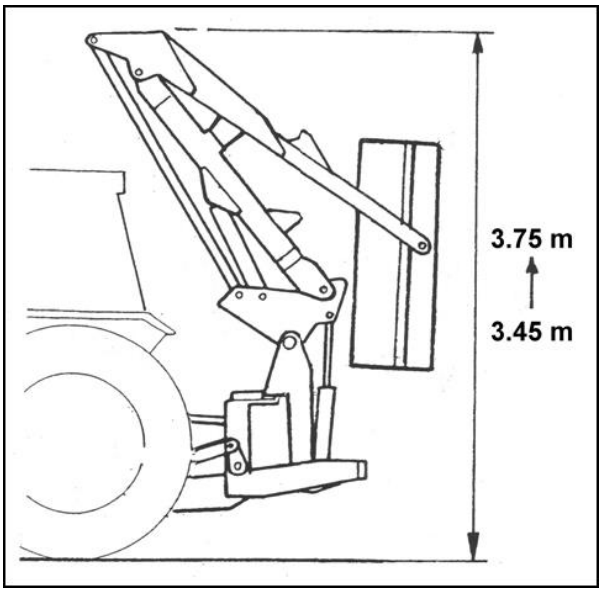

There is no fixed dimension for transport height. It will vary depending on the height that the machine is carried and the degree of arm fold that the rear of the cab will allow.

For the majority of installations the transport height will generally fall between a minimum of 3.45m and a maximum of 3.65m when the machine is correctly folded

### 7.10 Moving from Transport to Work Position

To revert to the work position, the previous procedures for the relevant models are largely reversed.

NOTE: Remember to unscrew the lift ram tap.

### 7.11 Engaging Drive

**T.i. models only**

Ensure that the rotor control lever is in the 'Stop' position before engaging the P.T.O. shaft.

Allow the oil to circulate for a minute or so before operating the arm head levers. Position the flail head in a safe position, increase the engine speed to a high idle and move rotor control lever to 'START'. After initial surging the rotor will run at an even speed.

**S.i. models only**

Place the flail head at a safe attitude and bring the tractor engine revolutions to 1000 r.p.m. Engage the P.T.O. and slowly increase revs. until operating speeds are attained.

### 7.12 Rotor Operating Speed

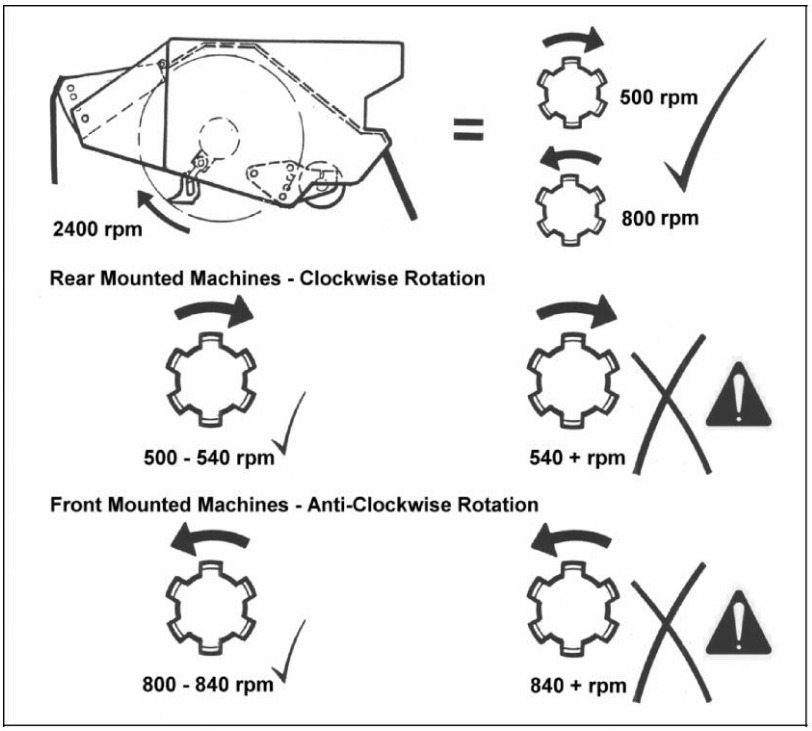

### 7.13 Tractor Forward Speed

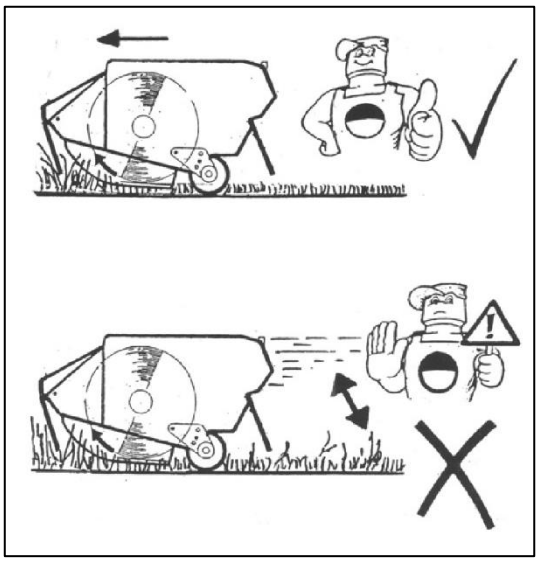

The material being cut determines tractor forward speed. Forward speed can be as fast as that which allows the flail head sufficient time to cut the vegetation properly.

Too fast a speed will be indicated by over frequent operation of the breakaway system, a fall off in tractor engine revs and a poor finish to the work leaving ragged uncut tufts and poorly mulched cuttings.

### 7.14 High Voltage Cables

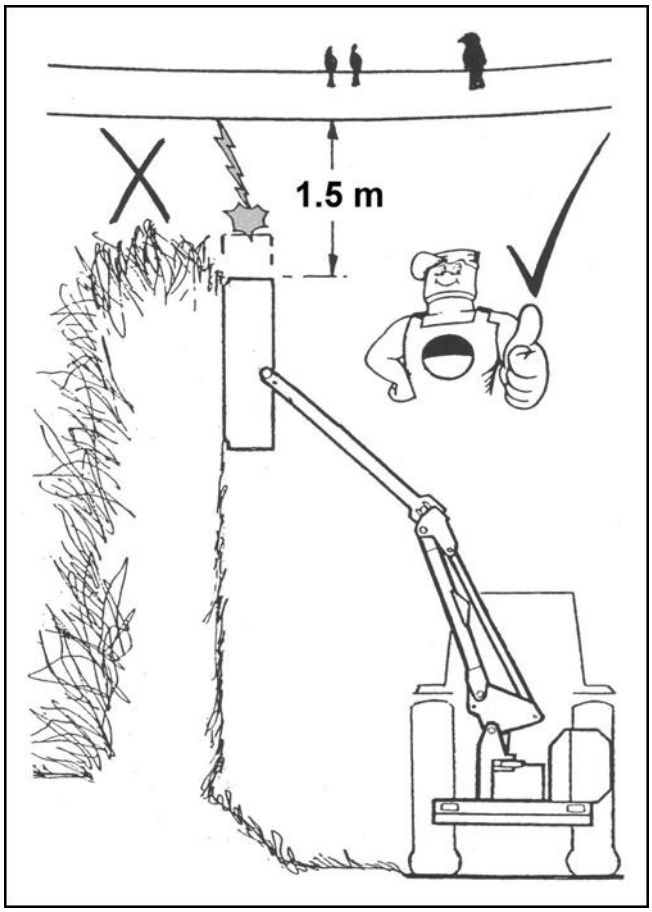


It cannot be stressed enough the dangers involved when working near high voltage electricity cables. Before attempting to work in these areas ensure you have read and fully understood the safety section at the beginning of this manual which includes information on this subject.

Always maintain a minimum clearance distance of 1.5 m when operating near high voltage cables.

It is advisable that you consult your Local Power Company to obtain information regarding a safe procedure for working.

### 7.15 Overhead Obstructions

Always be aware of the height of the machine when working or folded and take care especially when maneuvering near or under bridges, buildings, power cables or any other obstacles you may encounter when moving your machine.

### 7.16 Hedge Cutting Procedure

1. Cut the side and bottom of the field side first. This leaves the maximum thickness of hedge on the road side to prevent the possibility of any debris being thrown through the hedge into the path of oncoming vehicles.

2. Cut the side and bottom of the road side.

3. Top cut the hedge to the height required.

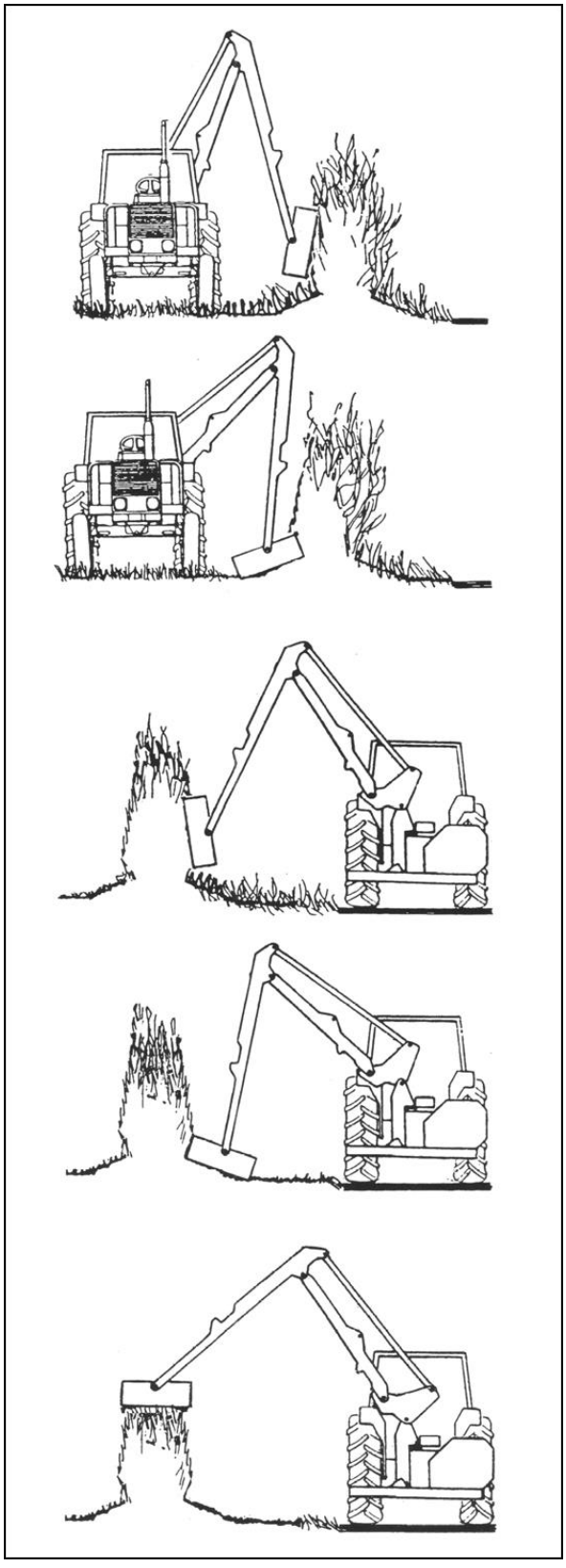

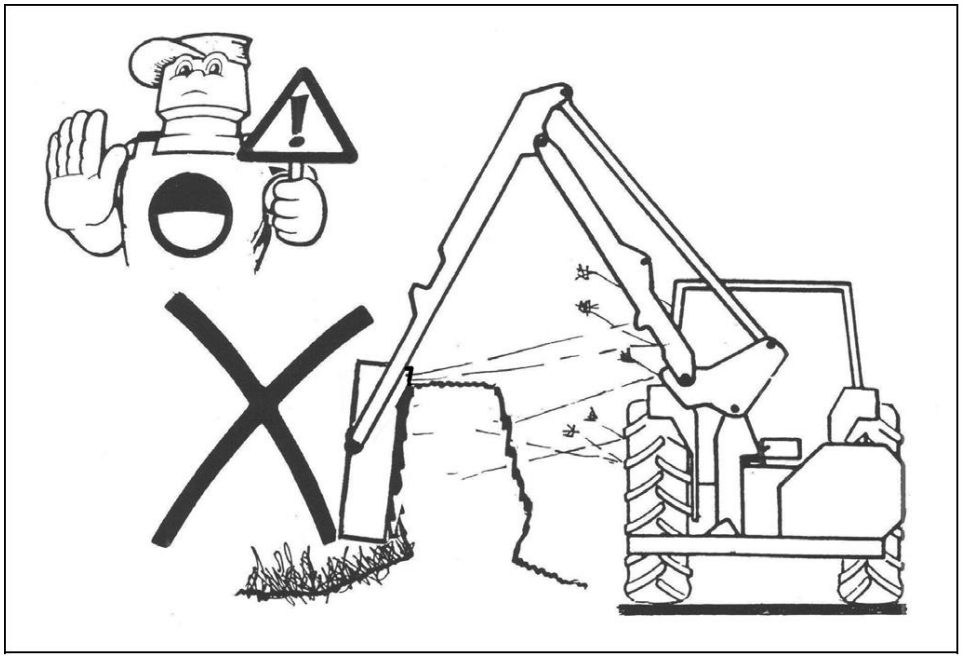

**WARNING**

Never cut on the blind side of the hedge.

It is impossible to see potential hazards or dangers and the position of the flail head would possibly allow debris to be propelled through the hedge towards the tractor and the operator.

**7.17 Working on Adverse Slopes**

When working high with the reach fully in it is possible for the main arm balance to go over center and take the weight off the lift ram. A restrictor in the gland connection of the lift ram prevents sudden unpredictable movements should this occur.

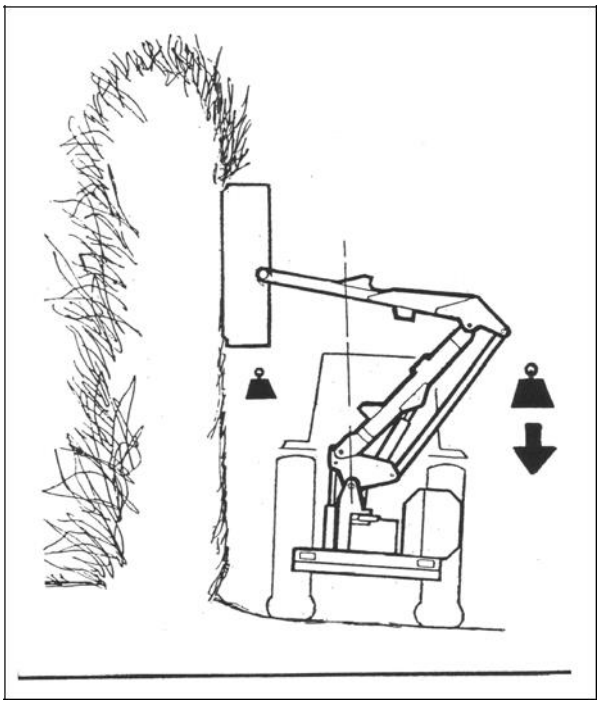

**WARNING**

Do not remove this restrictor from the lift ram gland connection.

The machine is fitted with a cam valve which stops unpredictable movements when working with the machine in a high position.

# 8. Maintenance

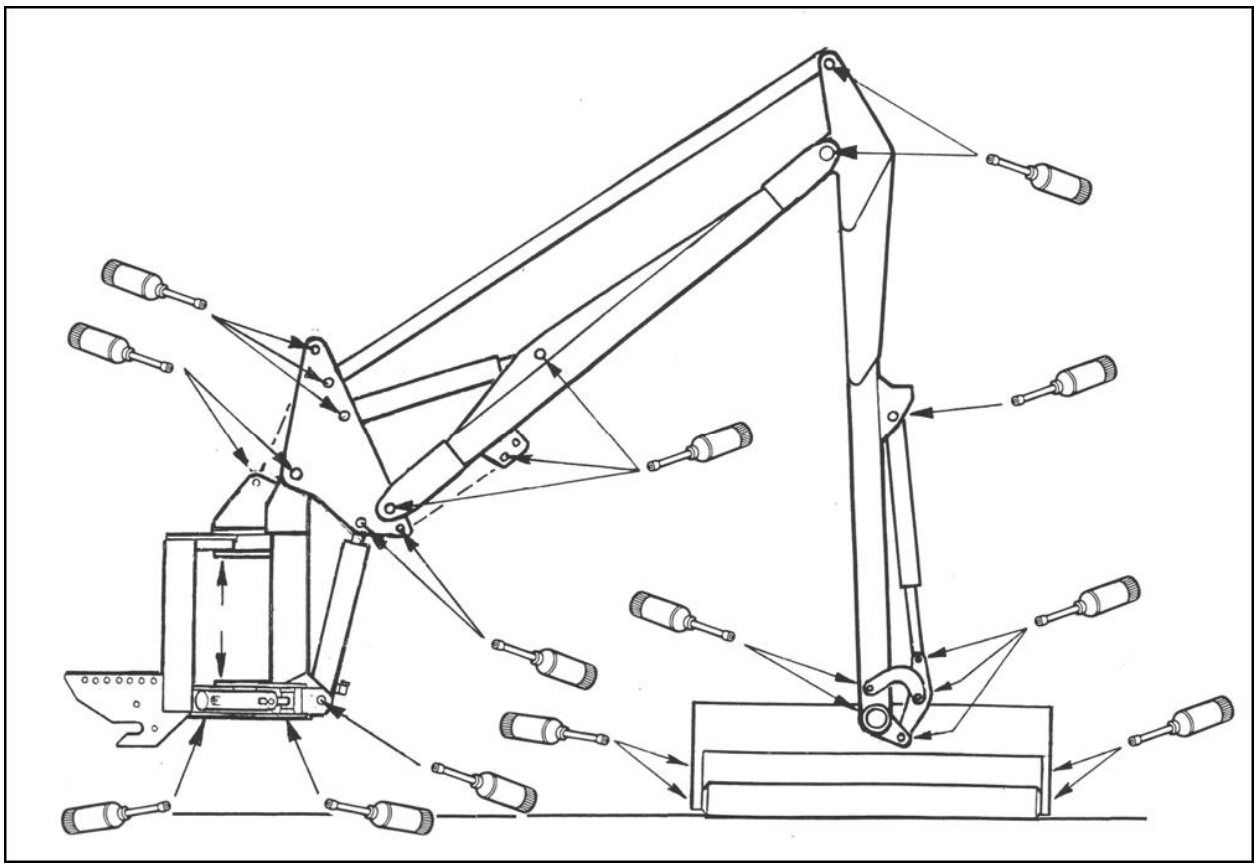

**8.1 Lubrication**

**8.1.1 General**

Grease daily all the points shown in the diagram above.

**8.1.2 P.T.O. Shaft**

Regularly check the P.T.O. guards for damage and ensure the anti rotation chains are in place and that their anchor points are in good condition.

Lubricate the points shown on the diagram below at the intervals indicated using general purpose lithium based grease.

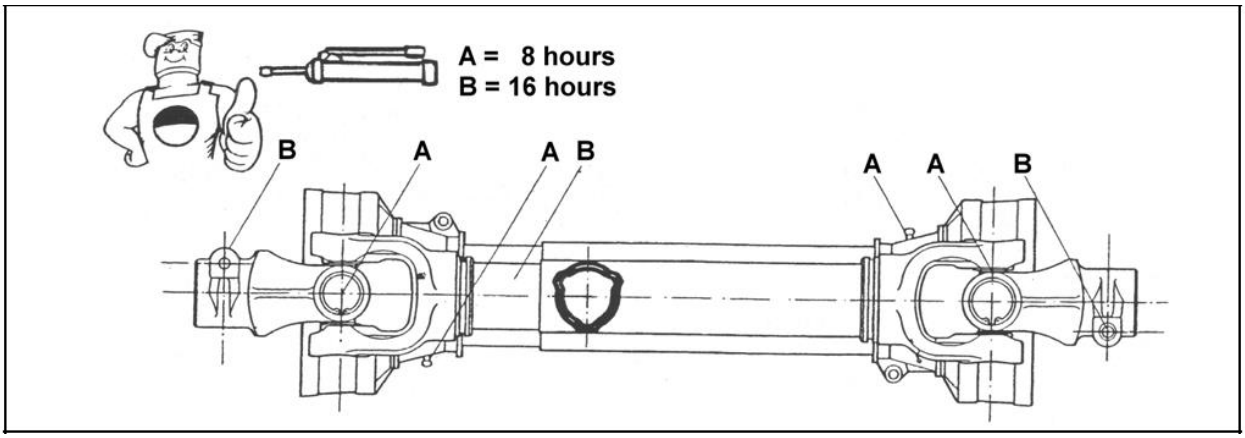


**WARNING**

Do not operate the machine with any damaged guards, replace suspect items immediately.

### 8.2 Hydraulic System

#### 8.2.1 Oil Supply

Check the oil level in the reservoir daily.

No fixed time period can be quoted for oil changes as operating conditions and maintenance standards vary so widely. Burnt and scorched oil odours and the oil darkening and thickening are all signs of oxidation and indicate the oil should be changed.

Moisture that results from condensation can become entrapped in the oil and cannot be removed by filtration so that water contamination is progressive.

Contamination can be reduced by:

- Cleaning around the reservoir cap before removal, and keeping that area clean.
- Using clean containers when replenishing the system.
- Regular servicing of the filtration system.

#### 8.2.2 Filtration Maintenance

The machine is protected by a 125 micron suction strainer and a low pressure 10 micron full flow return line filter.

- Suction strainer

The strainer is permanently fixed within the reservoir.

Should symptoms of pump cavitation or spongy intermittent operation occur the tank must be drained and flushed out with a suitable cleaning agent e.g. clean diesel oil

- Return Line Filter

The elements should be changed after the first 50 hours and thereafter at 500-hour intervals. It is important to note hours worked as if the filter becomes blocked an internal by-pass within the canister will operate and no symptoms of filter malfunction will occur to jog your memory.

### 8.3 Hydraulic Hoses

The condition of all hoses should be carefully checked during routine service of the machine. Hoses that have been chafed or damaged on their outer casing should be securely wrapped with waterproof adhesive tape to stop the metal braid from rusting. Hoses that have suffered damage to the metal braid should be changed at the earliest opportunity.

#### 8.3.1 Hose Replacement

- Replace one hose at a time to avoid the risk of wrong connections.
- When the hose is screwed to an additional fitting or union, use a second spanner on the union to avoid breaking both seals.
- Do not use jointing compound on the threads.
- Avoid twisting the hose. Adjust the hose line to ensure freedom from rubbing or trapping before tightening hose end connections.

Before changing hoses study the installation these are carefully calculated to prevent hose damage during operation. Always replace hoses in exactly the same manner. This is especially important for the flail hoses where they must be crossed, upper to lower, at the dipper and head pivots.

#### 8.3.2 Safety Note

Soft Seal hose connections are capable of holding pressure when the nut is only ‘finger tight’. It is therefore recommended that when dismantling, the hose be manually flexed, to relieve any residual pressure, with the retaining nut slackened prior to complete disassembly.

# 9. Exploded View and Parts List

Diagram A-Control assembly

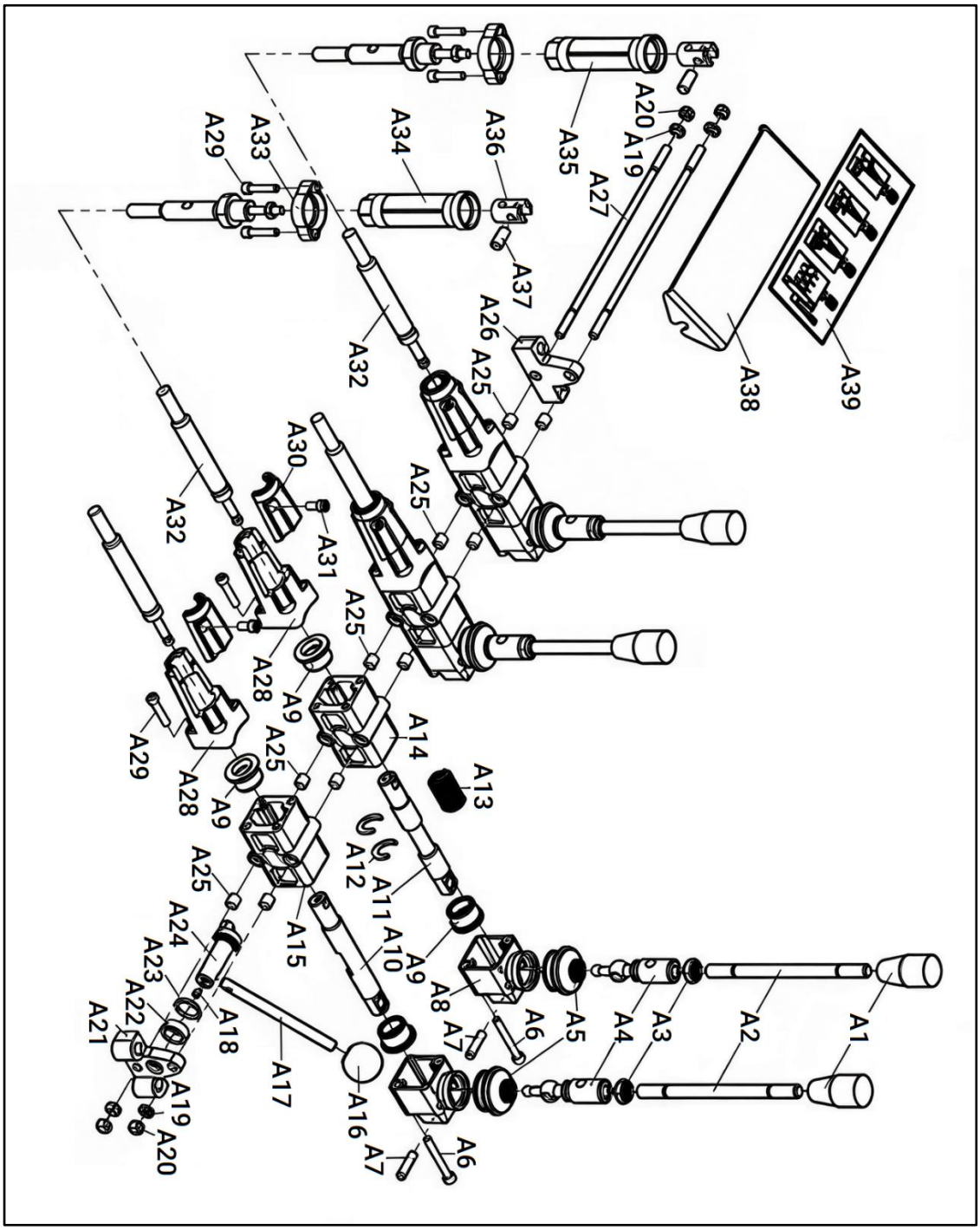

| No. | Specification | Qty |
|---|---|---|
| A1 | Short Hand Shank | 4 |
| A2 | Short Joystick | 4 |
| A3 | Thin Nut M10 | 4 |
| A4 | Shifting Block | 4 |
| A5 | Protecting Bushing | 4 |
| A6 | Hexagon Socket Head Cap Screw M5×40 | 8 |
| A7 | Type B Cylindrical Pin 6×26 | 4 |
| A8 | Upper Cover | 4 |
| A9 | Flange Bushing | 8 |
| A10 | Pull Rod 1 | 1 |
| A11 | Pull Rod 2 | 3 |
| A12 | Check Ring | 6 |
| A13 | Release Spring | 3 |
| A14 | Shell | 3 |
| A15 | Lock Hole Shell | 1 |
| A16 | Bulb Hand Shank | 1 |
| A17 | Lock Joystick | 1 |
| A18 | Hexagon Socket Set Screw M5×8 | 1 |
| A19 | Plain Washer 6 | 4 |
| A20 | Hex Lock Nut M6 | 4 |
| A21 | Fixed Seat 2 | 1 |
| A22 | Bushing | 1 |
| A23 | O-Ring 16×2.65 | 1 |
| A24 | Lock Shaft | 1 |
| A25 | Locating Sleeve | 10 |
| A26 | Fixed Seat 1 | 1 |
| A27 | Screw Rod | 2 |
| A28 | Lower Cover | 4 |
| A29 | Hexagon Socket Head Cap Screw M5×25 | 16 |
| A30 | Lower Cover | 4 |
| A31 | Hexagon Socket Head Cap Screw M5×12 | 8 |
| A32 | Dragline | 4 |
| A33 | Flange | 4 |
| A34 | Pressure Casting | 3 |
| A35 | Flared Cast Pipe | 1 |
| A36 | Aluminum Connector | 4 |
| A37 | Pin | 4 |
| A38 | Label Plate | 1 |
| A39 | Label | 1 |

Diagram B-Mowing part

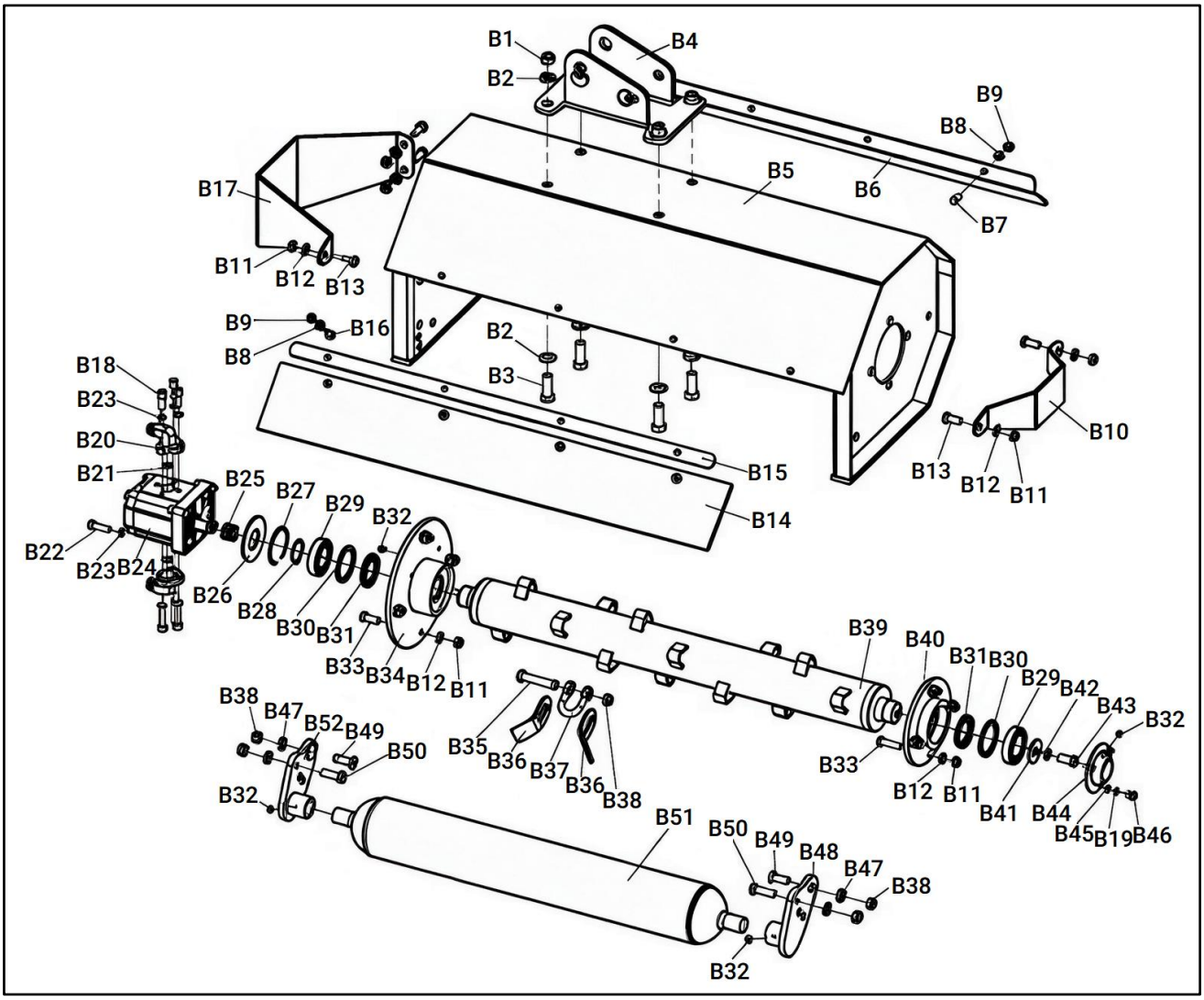


| No. | Specification | Qty |
|---|---|---|
| B1 | Hex Lock Nut M14 | 4 |
| B2 | Plain Washer 14 | 8 |
| B3 | Full Thread Bolt M14×40 | 4 |
| B4 | Hitch Frame Weldment | 1 |
| B5 | Hood Weldment | 1 |
| B6 | Head Board | 1 |
| B7 | Full Thread Bolt M8×20 | 4 |
| B8 | Plain Washer 8 | 8 |
| B9 | Hex Lock Nut M8 | 8 |
| B10 | Shaft End Cover Plate | 1 |
| B11 | Hex Lock Nut M10 | 13 |
| B12 | Plain Washer 10 | 13 |
| B13 | Full Thread Bolt M10×25 | 5 |
| B14 | Rubber Board | 1 |
| B15 | Pressing Bar | 1 |
| B16 | Full Thread Bolt M8×25 | 4 |
| B17 | Motor Guard Board | 1 |

| No. | Specification | Qty |
|---|---|---|
| B18 | Hexagon Socket Head Cap Screw M8×25 | 6 |
| B19 | Spring Washer 6 | 3 |
| B20 | Motor Oil Inlet & Outlet Connector | 2 |
| B21 | O-Ring23.6×2.65 | 2 |
| B22 | Hexagon Socket Head Cap Screw M8×30 | 4 |
| B23 | Spring Washer 8 | 10 |
| B24 | Hydraulic Motor | 1 |
| B25 | Splined Hub | 1 |
| B26 | Motor Positioning Plate | 1 |
| B27 | Hole Circlip | 1 |
| B28 | Shaft Circlip | 1 |
| B29 | Deep Groove Ball Bearing 6007 | 2 |
| B30 | Oil Seal Retaining Ring | 2 |
| B31 | FB Oil Seal 40×55×8 | 2 |
| B32 | Oil Cup M6 | 4 |
| B33 | Full Thread Bolt M10×30 | 8 |
| B34 | Main Bearing Housing | 1 |
| B35 | Half Thread Bolt M12×60 | 16 |
| B36 | Blade | 32 |
| B37 | Blade Buckle | 16 |
| B38 | Hex Lock Nut M12 | 20 |
| B39 | Blade Shaft | 1 |
| B40 | Secondary Bearing Housing | 1 |
| B41 | Locking Gasket | 1 |
| B42 | Spring Washer 12 | 1 |
| B43 | Full Thread Bolt M12×25 | 1 |
| B44 | End Cap | 1 |
| B45 | Plain Washer 6 | 3 |
| B46 | Full Thread Bolt M6×16 | 3 |
| B47 | Plain Washer 12 | 4 |
| B48 | Roller Shaft Seat 1 | 1 |
| B49 | Hexagon Socket Countersunk Screw M12×30 | 2 |
| B50 | Full Thread Bolt M12×35 | 2 |
| B51 | Roller Weldment | 1 |
| B52 | Roller Shaft 2 | 1 |

Diagram C-Mowing part

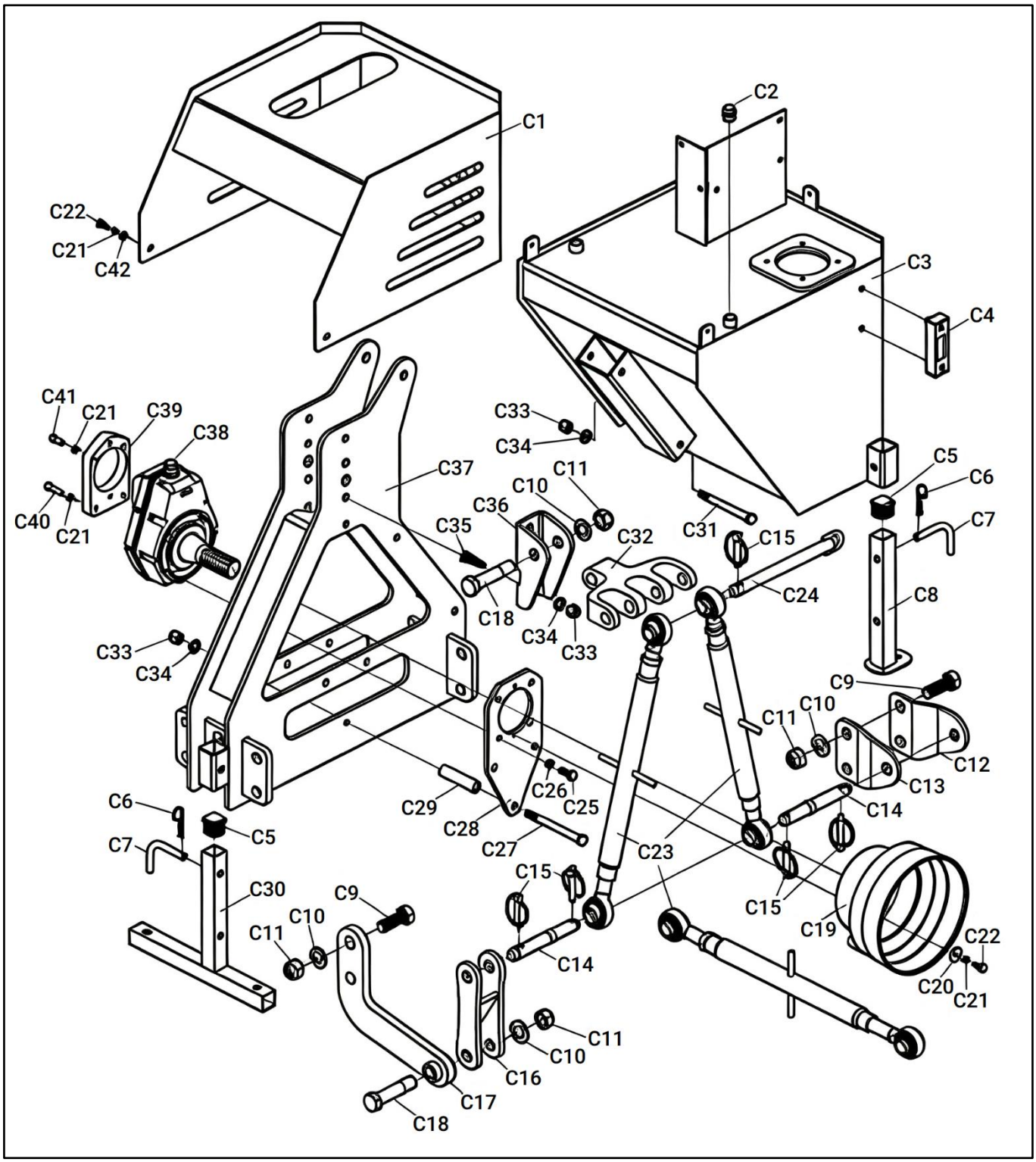

| No. | Specification | Qty |
|---|---|---|
| C1 | Fuel Tank Cover | 1 |
| C2 | Air Plug M16×1.5 | 2 |
| C3 | Fuel Tank | 1 |
| C4 | Liquid Level Gauge | 1 |
| C5 | End Cover | 3 |
| C6 | Middle R Pin | 4 |
| C7 | D Square Cotter | 3 |
| C8 | Support Leg 2 | 2 |
| C9 | Full Thread Bolt M20×55 | 4 |
| C10 | Plain Washer 20 | 9 |
| C11 | Hex Lock Nut M20 | 9 |
| C12 | Lower Hook Plate 1 | 1 |
| C13 | Lower Hook Plate 1 | 1 |
| C14 | Lower Pull Rod Shaft Pin | 2 |
| C15 | Latch Assembly | 5 |
| C16 | Lifting Eye Weldment | 1 |
| C17 | Connecting Lever Weldment | 1 |
| C18 | Articulation Bolt M20×95 | 2 |
| C19 | PTO Shaft Cover | 1 |
| C20 | Extra Large Plain Washer 8 | 10 |
| C21 | Spring Washer 8 | 5 |
| C22 | Full Thread Bolt M8×16 | 5 |
| C23 | Adjusting Pull Rod | 3 |
| C24 | Upper Pull Rod Shaft Pin Weldment | 1 |
| C25 | Fine Thread Bolt M10×1.25×25 | 4 |
| C26 | Spring Washer 10 | 4 |
| C27 | Half Thread Bolt M12×130 | 3 |
| C28 | Gearbox Fixed Plate | 1 |
| C29 | Spacer Bushing | 3 |
| C30 | Support Leg 1 | 1 |
| C31 | Half Thread Bolt M12×120 | 2 |
| C32 | Three-joint Yoke | 1 |
| C33 | Hex Lock Nut M12 | 3 |
| C34 | Plain Washer 12 | 8 |
| C35 | Full Thread Bolt M12×40 | 3 |
| C36 | Upper Hook Frame | 1 |
| C37 | Bed Frame Weldment | 1 |
| C38 | Oil Pump Transmission Box | 1 |
| C39 | Transition Connecting Plate | 1 |
| C40 | Hexagon Socket Head Cap Screw M8×30 | 2 |
| C41 | Hexagon Socket Head Cap Screw M8×20 | 2 |
| C42 | Plain Washer 6 | 4 |

Diagram D-Mowing part

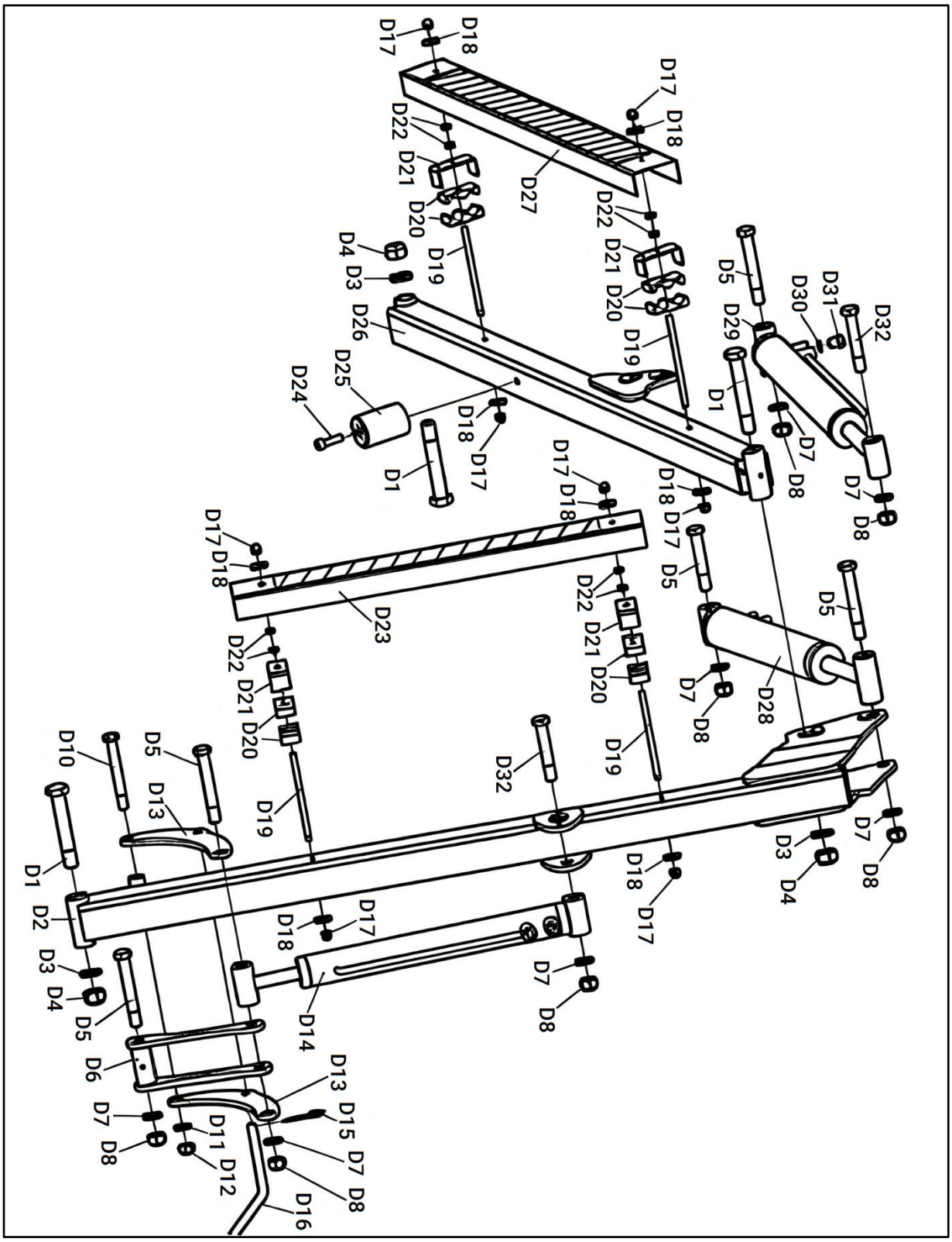

| No. | Specification | Qty |
|---|---|---|
| D1 | Articulation Bolt M20×130 | 3 |
| D2 | Small Support Arm | 1 |
| D3 | Plain Washer 20 | 9 |
| D4 | Hex Lock Nut M20 | 9 |
| D5 | Articulation Bolt M16×120 | 4 |
| D6 | Push Pull Plate | 1 |
| D7 | Plain Washer 16 | 7 |
| D8 | Hex Lock Nut M16 | 7 |
| D10 | Articulation Bolt M14×120 | 1 |
| D11 | Plain Washer 14 | 1 |
| D12 | Hex Lock Nut M14 | 1 |
| D13 | Swing Arm | 2 |
| D14 | Swing Arm Cylinder | 1 |
| D15 | Middle R Pin | 4 |
| D16 | Lock Pin | 1 |
| D17 | Cap Nut M8 | 8 |
| D18 | Extra Large Plain Washer 8 | 10 |
| D19 | Screw Rod | 4 |
| D20 | Oil Pipe Clip | 8 |
| D21 | Pressing Plate | 4 |
| D22 | Hexagon Nut M8 | 8 |
| D23 | Short Oil Pipe Guard | 1 |
| D24 | Hexagon Socket Head Cap Screw M10×35 | 1 |
| D25 | Buffer Limit Block | 1 |
| D26 | Big Support Arm | 1 |
| D27 | Long Oil Pipe Guard | 1 |
| D28 | Small Arm Cylinder | 1 |
| D29 | Big Arm Cylinder | 1 |
| D30 | Bonded Washer 14.7×22×1.5 | 1 |
| D31 | Breather Filter | 1 |
| D32 | Articulation Bolt M16×100 | 3 |

Diagram E-Mowing part

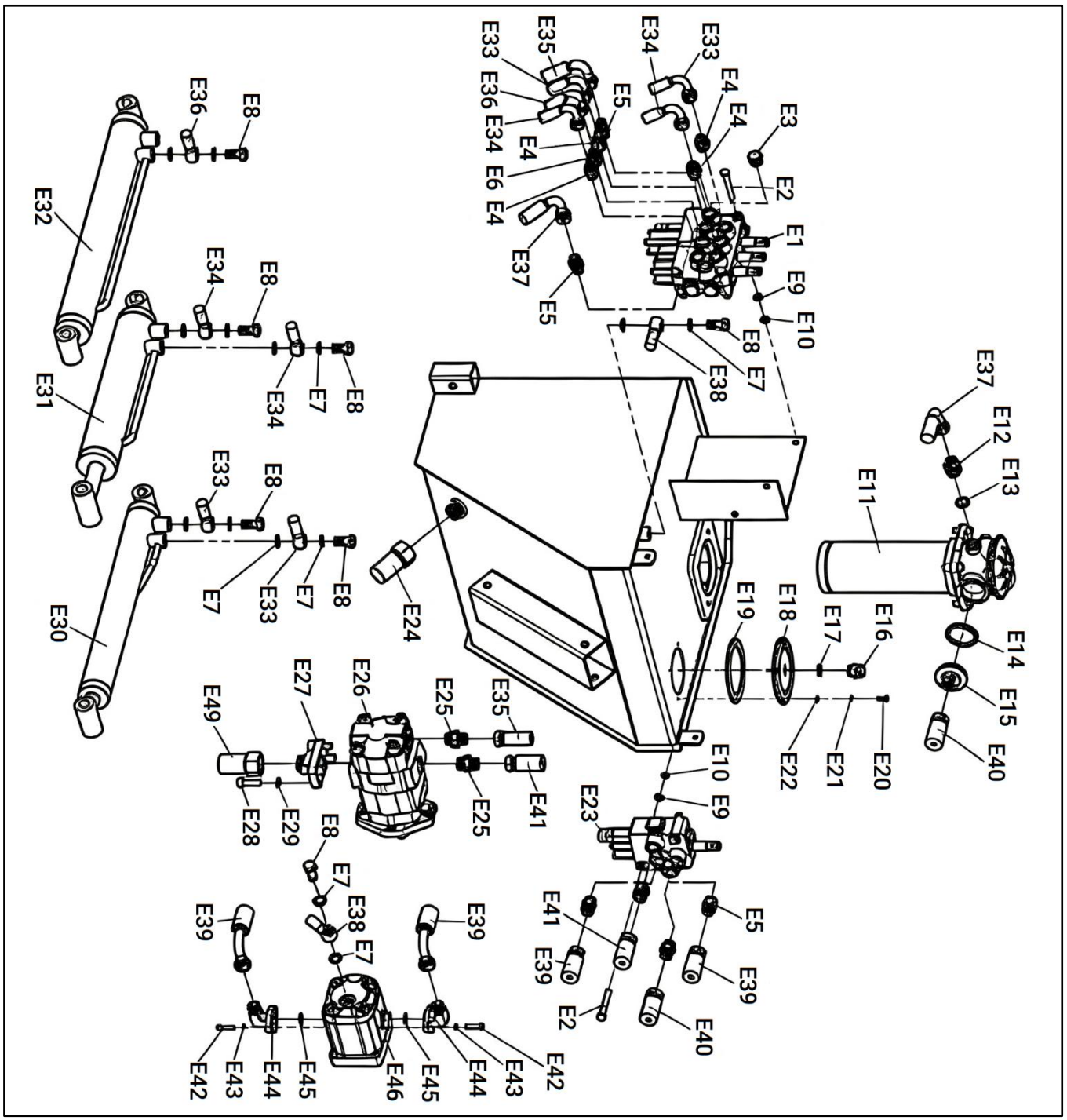


| No. | Specification | Qty |
|---|---|---|
| E1 | Three-way Valve | 1 |
| E2 | Half Thread Bolt M8×60 | 5 |
| E3 | Inner Hex Tapered Plug | 1 |
| E4 | Oil Inlet & Outlet Connector | 3 |
| E5 | Connector M18×1.5-G3/8 | 6 |
| E6 | Throttle Valve Connector | 2 |
| E7 | Bonded Washer 14.7×22×1.5 | 14 |
| E8 | Hinge Joint Bolt M14×1.5 | 6 |
| E9 | Plain Washer 8 | 5 |
| E10 | Hex Lock Nut M8 | 5 |

| No. | Specification | Qty |
|---|---|---|
| E11 | Return Oil Filter 100×30L | 1 |
| E12 | Double-End Adapter M18×1.5 | 1 |
| E13 | O-Ring 18×2.65 | 1 |
| E14 | Bonded Washer M42 | 1 |
| E15 | Oil Filter Adapter | 1 |
| E16 | Air Plug M16×1.5 | 1 |
| E17 | Bonded Washer M16 | 1 |
| E18 | Fuel Tank Cap | 1 |
| E19 | Fuel Tank Sealing Gasket | 1 |
| E20 | Full Thread Bolt M6×12 | 4 |
| E21 | Spring Washer 6 | 4 |
| E22 | Plain Washer 6 | 4 |
| E23 | Single Valve | 1 |
| E24 | Oil Pump Inlet Pipe | 1 |
| E25 | Transition Connector M18×1.5-G1/2×14 | 2 |
| E26 | Duplex Gear Pump | 1 |
| E27 | Oil Pump Inlet Adapter | 1 |
| E28 | Hexagon Socket Head Cap Screw M10×30 | 4 |
| E29 | Spring Washer 10 | 4 |
| E30 | Swing Arm Cylinder | 1 |
| E31 | Small Arm Cylinder | 1 |
| E32 | Big Arm Cylinder | 1 |
| E33 | Swing Arm Cylinder Pipe | 2 |
| E34 | Small Arm Cylinder Pipe | 2 |
| E35 | Pipe from Oil Pump to Three-way Valve | 1 |
| E36 | Big Arm Cylinder Pipe | 1 |
| E37 | Three-way Valve Outlet Pipe | 1 |
| E38 | Motor Oil Return Pipe | 1 |
| E39 | Motor Oil Filling Pipe | 2 |
| E40 | Pipe from Single Valve to Oil Filter | 1 |
| E41 | Oil Pump Outlet Pipe | 1 |
| E42 | Hexagon Socket Head Cap Screw M8×25 | 6 |
| E43 | Spring Washer 8 | 6 |
| E44 | Motor Oil Inlet & Outlet Connector | 2 |
| E45 | O-Ring 23.6×2.65 | 2 |
| E46 | Hydraulic Motor | 1 |

Diagram F-Mowing part

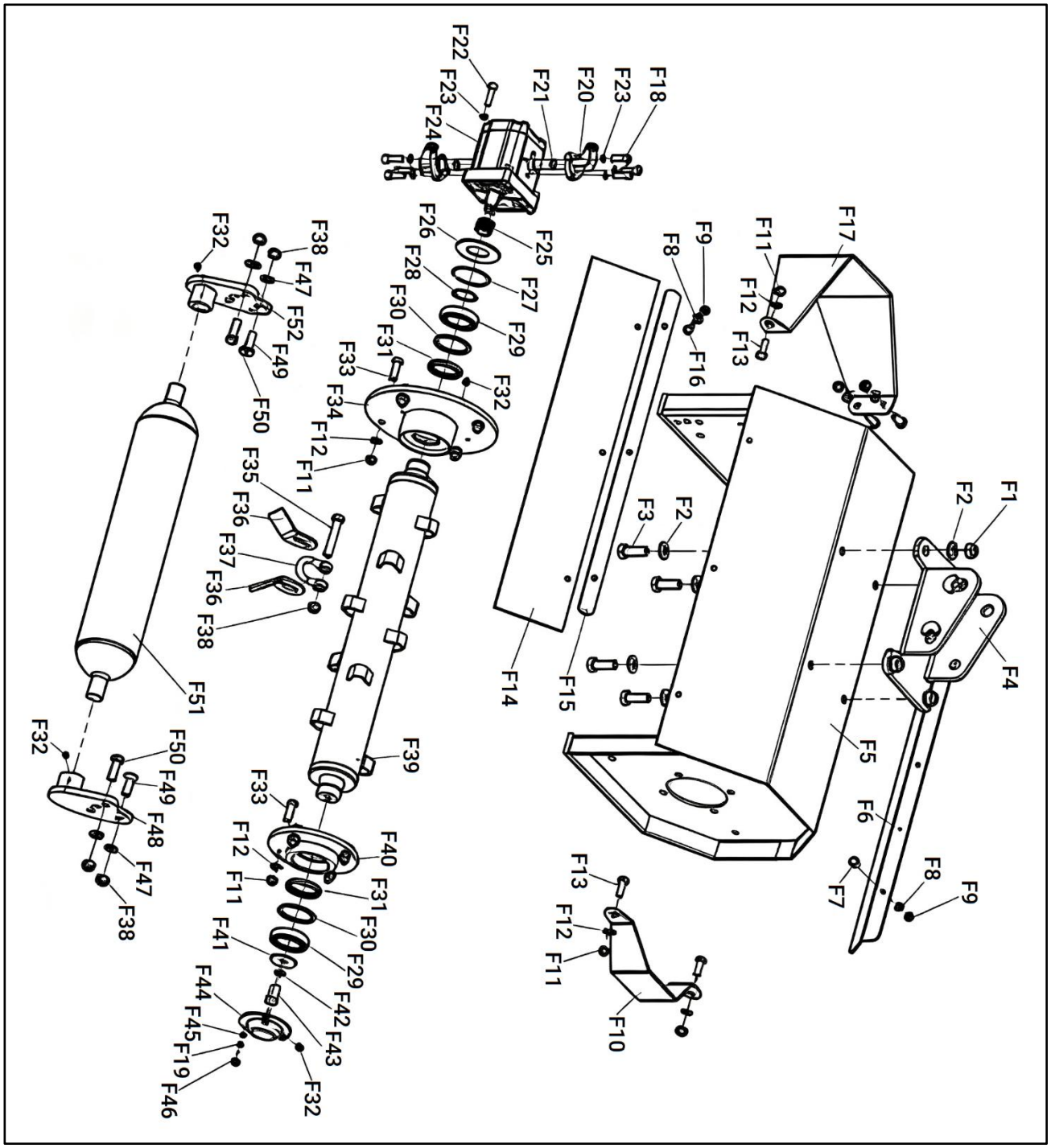


| No. | Specification | Qty |
|---|---|---|
| F1 | Hex Lock Nut M14 | 4 |
| F2 | Plain Washer 14 | 8 |
| F3 | Full Thread Bolt M14×40 | 4 |
| F4 | Hitch Frame Weldment | 1 |
| F5 | Hood | 1 |
| F6 | Head Board | 1 |
| F7 | Full Thread Bolt M8×20 | 3 |
| F8 | Plain Washer 8 | 6 |
| F9 | Hex Lock Nut M8 | 6 |
| F10 | Shaft End Cover Plate | 1 |

| No. | Specification | Qty |
|---|---|---|
| F11 | Hex Lock Nut M10 | 13 |
| F12 | Plain Washer 10 | 13 |
| F13 | Full Thread Bolt M10×25 | 5 |
| F14 | Rubber Board | 1 |
| F15 | Pressing Bar | 1 |
| F16 | Full Thread Bolt M8×25 | 3 |
| F17 | Motor Guard Board | 1 |
| F18 | Hexagon Socket Head Cap Screw M8×25 | 6 |
| F19 | Spring Washer 6 | 3 |
| F20 | Motor Oil Inlet & Outlet Connector | 2 |
| F21 | O-Ring 23.6×2.65 | 2 |
| F22 | Hexagon Socket Head Cap Screw M8×30 | 4 |
| F23 | Spring Washer 8 | 10 |
| F24 | Hydraulic Motor | 1 |
| F25 | Splined Hub | 1 |
| F26 | Motor Positioning Plate | 1 |
| F27 | Hole Circlip | 1 |
| F28 | Shaft Circlip | 1 |
| F29 | Deep Groove Ball Bearing 6007 | 2 |
| F30 | Oil Seal Retaining Ring | 2 |
| F31 | FB Oil Seal 40×55×8 | 2 |
| F32 | Oil Cup M6 | 4 |
| F33 | Full Thread Bolt M10×30 | 8 |
| F34 | Main Bearing Housing | 1 |
| F35 | Half Thread Bolt M12×65 | 16 |
| F36 | Blade | 32 |
| F37 | Blade Buckle | 16 |
| F38 | Hex Lock Nut M12 | 20 |
| F39 | Blade Shaft | 1 |
| F40 | Secondary Bearing Housing | 1 |
| F41 | Locking Gasket | 1 |
| F42 | Spring Washer 12 | 1 |
| F43 | Full Thread Bolt M12×25 | 1 |
| F44 | End Cap | 1 |
| F45 | Plain Washer 6 | 3 |
| F46 | Full Thread Bolt M6×16 | 3 |
| F47 | Plain Washer 12 | 4 |
| F48 | Roller Shaft Seat 1 | 1 |
| F49 | Hexagon Socket Countersunk Screw M12×30 | 2 |
| F50 | Full Thread Bolt M12×35 | 2 |
| F51 | Roller Weldment | 1 |
| F52 | Roller Shaft Seat 2 | 1 |

**Diagram G-TAT35 Disc Trimmer Parts**

**Diagram G1-Disc Pruner**

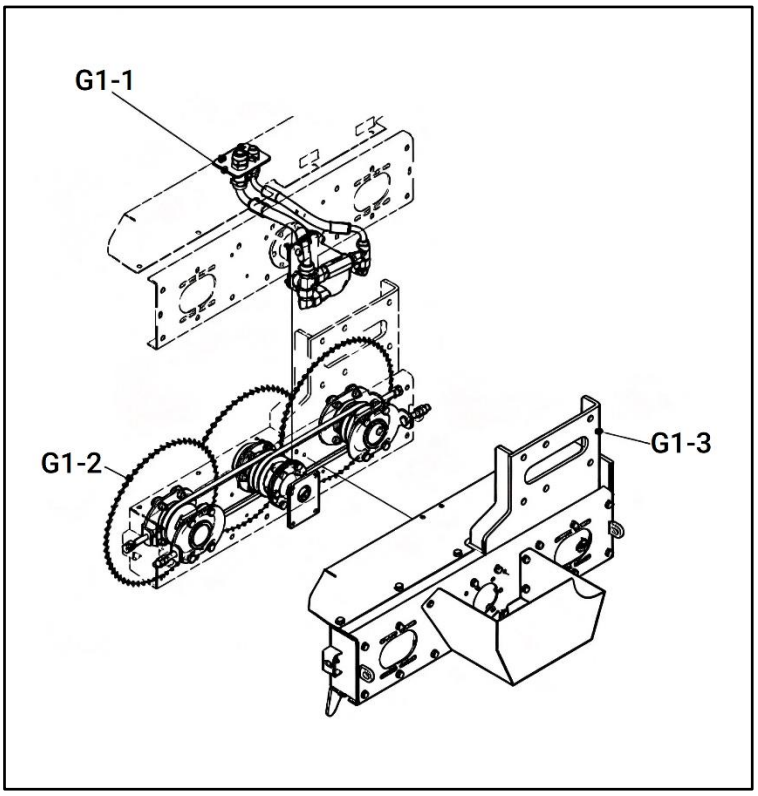


| No. | Specification | Qty |
|---|---|---|
| G1-1 | Hydraulic drive assembly | 1 |
| G1-2 | Carter assembly | 1 |
| G1-3 | Rack assembly | 1 |

Diagram G2-Rack Assembly

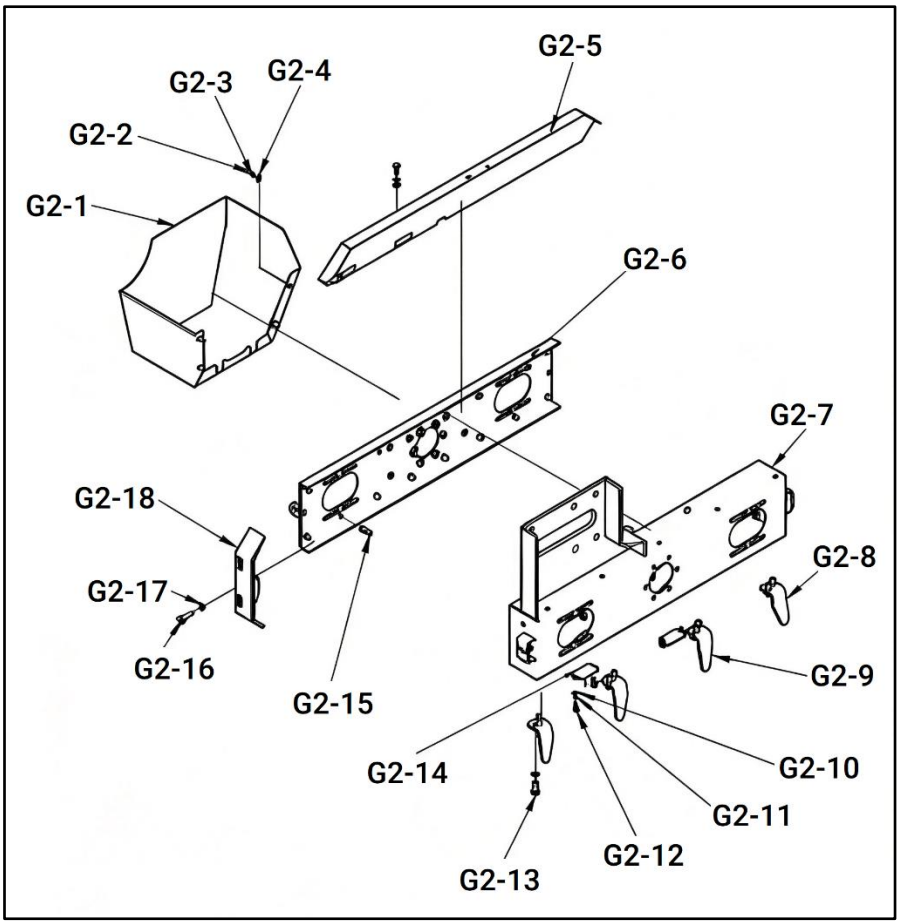


| No. | Specification | Qty |
|---|---|---|
| G2-1 | Motor Housing Weldment | 1 |
| G2-2 | Full Thread Bolt M8×20 | 9 |
| G2-3 | Spring Washer 8 | 25 |
| G2-4 | Plain Washer 8 | 25 |
| G2-5 | Tail Gate | 1 |
| G2-6 | Rack Cover Plate Weldment | 1 |
| G2-7 | Rack Weldment | 1 |
| G2-8 | Right Baffle | 1 |
| G2-9 | Left Baffle | 3 |
| G2-10 | Plain Washer 6 | 4 |
| G2-11 | Spring Washer 6 | 4 |
| G2-12 | Full Thread Bolt M6×16 | 4 |
| G2-13 | Full Thread Bolt M10×25 | 8 |
| G2-14 | Sealing Plate | 2 |
| G2-15 | Full Thread Bolt M8×25 | 16 |
| G2-16 | Full Thread Bolt M10×30 | 2 |
| G2-17 | Spring Washer 10 | 10 |
| G2-18 | Support Plate Weldment | 1 |

Diagram G3-Drillhead Assembly

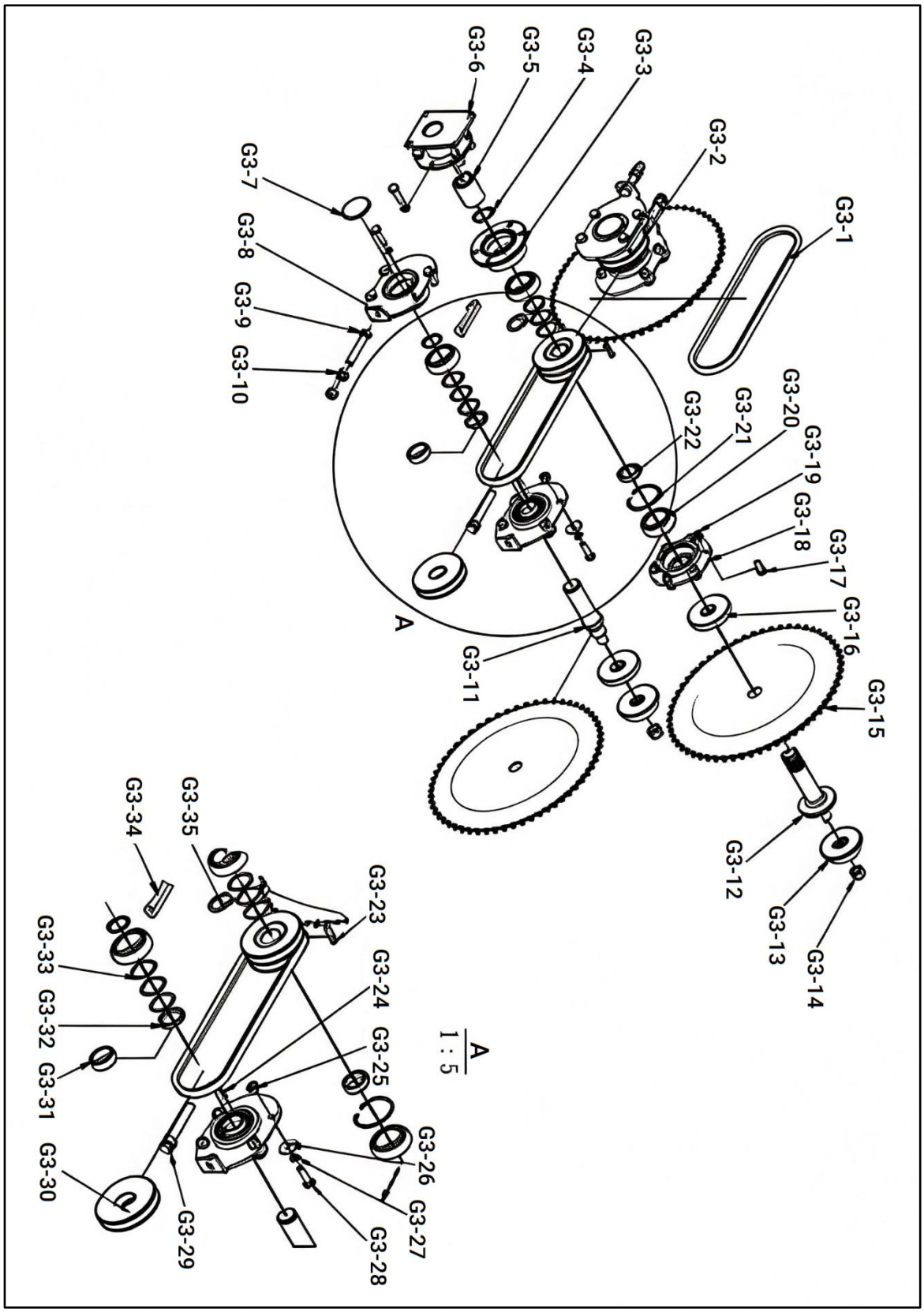

| No. | Specification | Qty |
|---|---|---|
| G3-1 | V-belt | 2 |
| G3-2 | Main Drive Pulley | 1 |
| G3-3 | Active Bearing Upper Seat | 1 |
| G3-4 | Thickened Shaft Circlip | 3 |
| G3-5 | Splined Hub | 1 |
| G3-6 | Transition Seat Weldment | 1 |
| G3-7 | End Cap 52×7 | 2 |
| G3-8 | Driven Bearing Upper Housing | 2 |
| G3-9 | Full Thread Bolt M12×70 | 2 |
| G3-10 | Hexagon Nut M12 | 6 |
| G3-11 | Driven Shaft Weldment | 2 |
| G3-12 | Active Shaft | 1 |
| G3-13 | Nut Base | 3 |
| G3-14 | Hex Lock Nut M16×1.5 | 3 |
| G3-15 | Saw Blade 355 (Toothed) | 3 |
| G3-16 | Adjusting Spacer | 3 |
| G3-17 | Full Thread Bolt M10×25 | 6 |
| G3-18 | Active Bearing Lower Housing | 1 |
| G3-19 | Hex Lock Nut M10 | 6 |
| G3-20 | Deep Groove Ball Bearing | 6 |
| G3-21 | Hole Circlip | 3 |
| G3-22 | 10 mm Spacer | 3 |
| G3-23 | Type A Flat Key 8×7×30 | 1 |
| G3-24 | Type A Flat Key 8×7×18 | 2 |
| G3-25 | Driven Bearing Lower Housing | 2 |
| G3-26 | Extra Large Plain Washer 10 | 8 |
| G3-27 | Spring Washer 10 | 22 |
| G3-28 | Full Thread Bolt M10×30 | 22 |
| G3-29 | Full Thread Bolt M12×90 | 2 |
| G3-30 | Driven Pulley | 2 |
| G3-31 | 15 mm Spacer | 2 |
| G3-32 | 7 mm Spacer | 2 |
| G3-33 | Shim | 9 |
| G3-34 | Threaded Base | 4 |
| G3-35 | Shim 2 | 1 |

Diagram G4-Hydraulic Drive Assembly

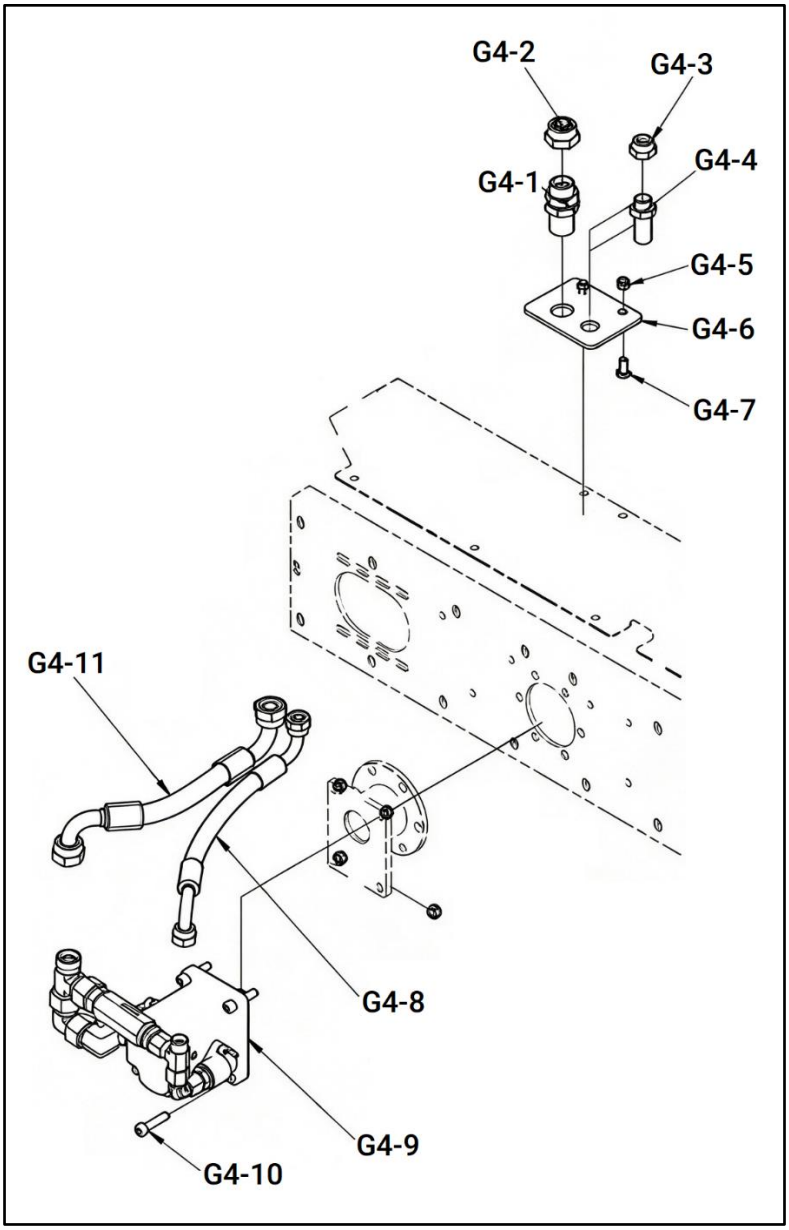


| No. | Specification | Qty |
|---|---|---|
| G4-1 | Straight Union Fitting M26×1.5 | 1 |
| G4-2 | Plug | 1 |
| G4-3 | Plug | 1 |
| G4-4 | Straight Union Fitting | 1 |
| G4-5 | Hex Lock Nut M8 | 6 |
| G4-6 | Fixed Plate | 1 |
| G4-7 | Full Thread Bolt M8×16 | 2 |
| G4-8 | Suction Pipe | 1 |
| G4-9 | Motor Assembly | 1 |
| G4-10 | Hexagon Socket Head Cap Screw M8×35 | 4 |
| G4-11 | Oil Return Pipe | 1 |

**Diagram H-TAT47 Disc Trimmer Parts**

**Diagram H1-Disc Pruner**

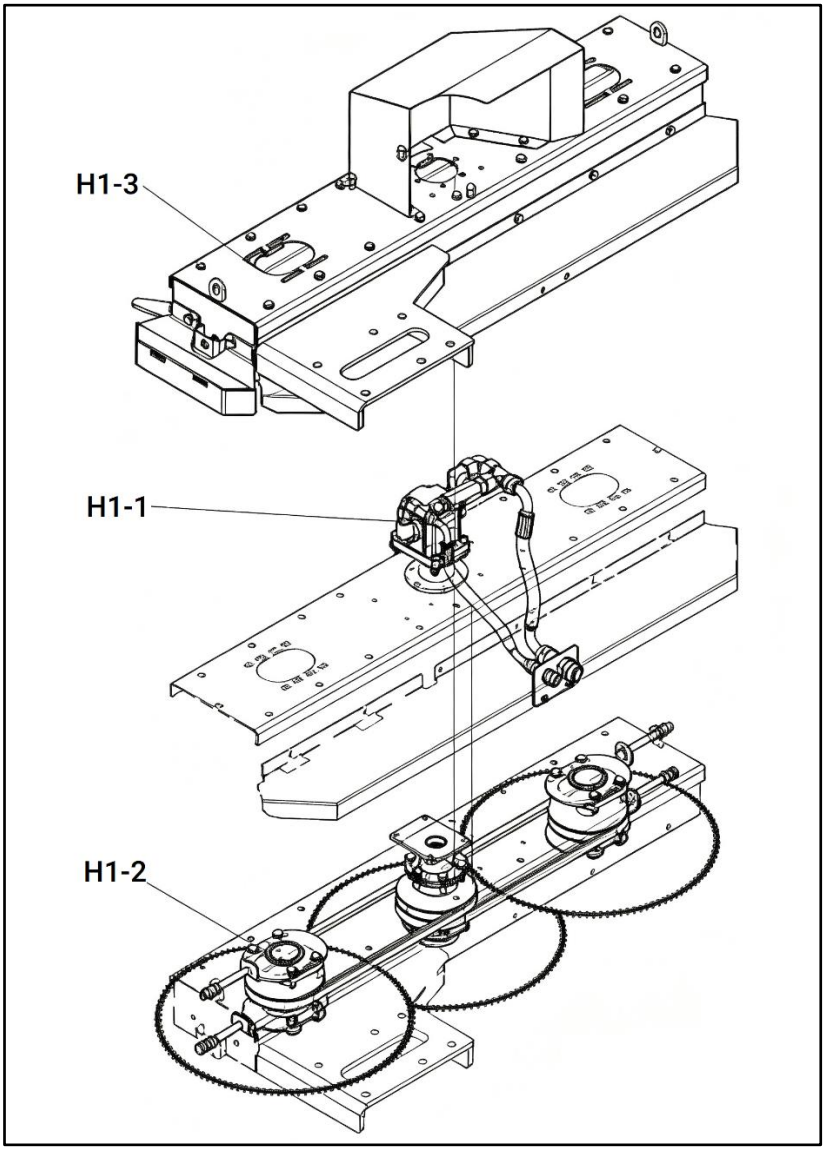


| No. | Specification | Qty |
|---|---|---|
| H1-1 | Hydraulic drive assembly | 1 |
| H1-2 | Carter assembly | 1 |
| H1-3 | Rack assembly | 1 |

Diagram H2-Rack Assembly

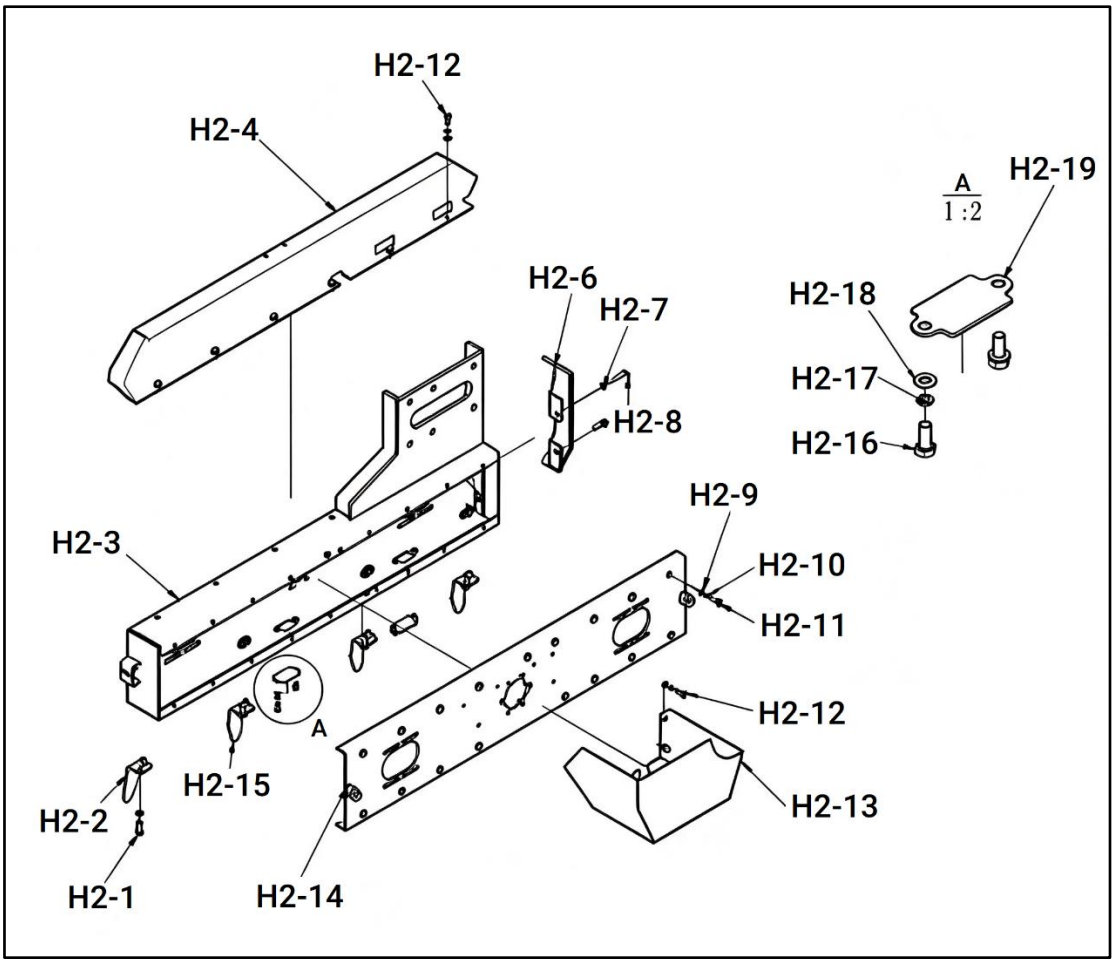


| No. | Specification | Qty |
|---|---|---|
| H2-1 | Full Thread Bolt M10×25 | 8 |
| H2-2 | Right Baffle | 1 |
| H2-3 | Rack Weldment | 1 |
| H2-4 | Tail Gate | 1 |
| H2-5 | Support Plate Weldment | 1 |
| H2-6 | Spring Washer 10 | 10 |
| H2-7 | Full Thread Bolt M10×30 | 2 |
| H2-8 | Plain Washer 8 | 27 |
| H2-9 | Spring Washer 8 | 27 |
| H2-10 | Full Thread Bolt M8×25 | 17 |
| H2-11 | Full Thread Bolt M8×20 | 10 |
| H2-12 | Motor Housing Weldment | 1 |
| H2-13 | Rack Cover Plate Weldment | 1 |
| H2-14 | Left Baffle | 3 |
| H2-15 | Full Thread Bolt M6×16 | 4 |
| H2-16 | Spring Washer 6 | 4 |
| H2-17 | Plain Washer 6 | 4 |
| H2-18 | Sealing Plate | 2 |
| H2-19 | Full Thread Bolt M10×25 | 8 |

Diagram H3-Drill head assembly

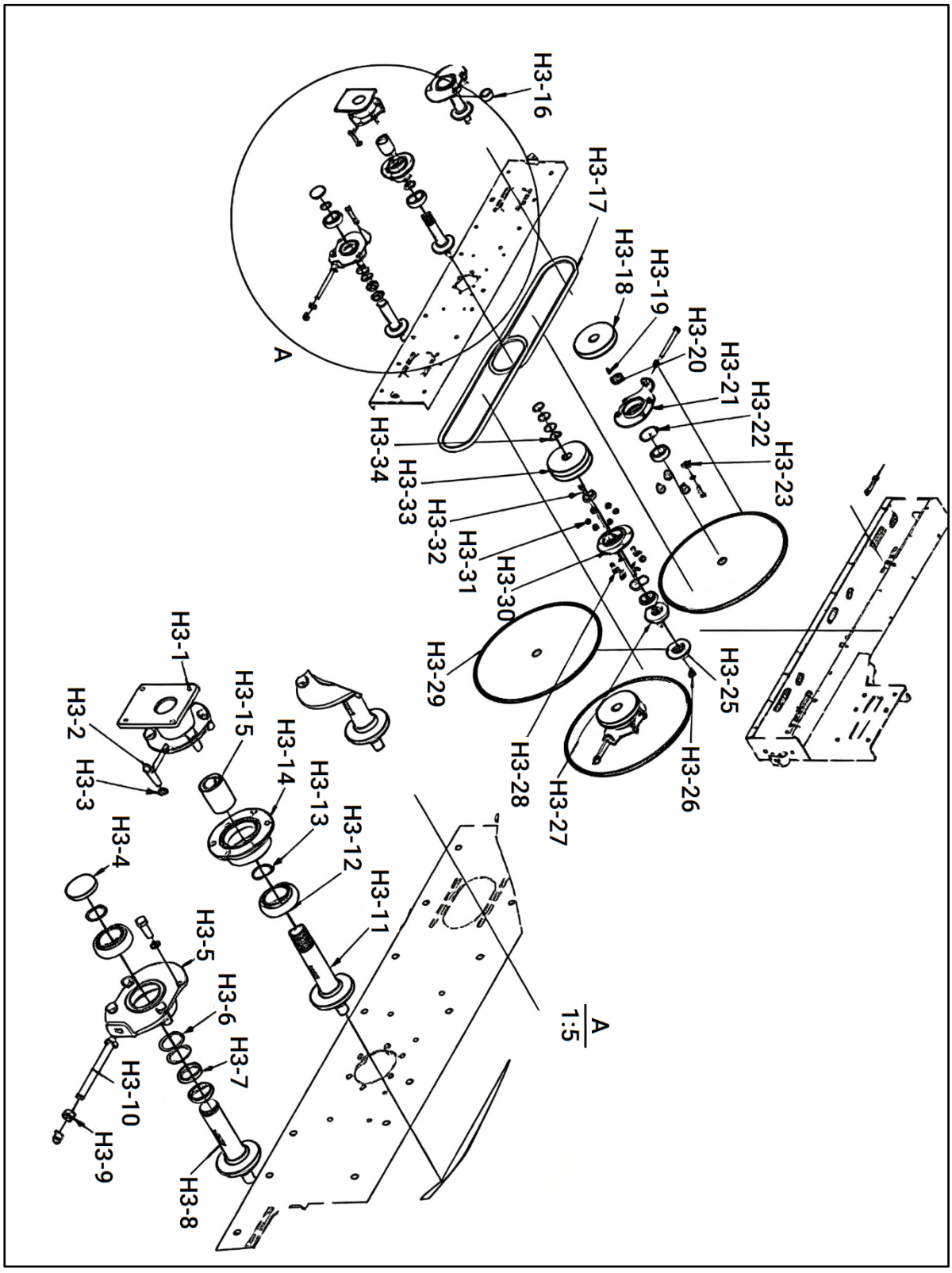

| No. | Specification | Qty |
|---|---|---|
| H3-1 | Transition Seat Weldment | 1 |
| H3-2 | Full Thread Bolt M10×30 | 22 |
| H3-3 | Spring Washer 10 | 22 |
| H3-4 | End Cap 52×7 | 2 |
| H3-5 | Driven Bearing Upper Housing | 2 |
| H3-6 | Shim | 9 |
| H3-7 | 7 mm Spacer | 4 |
| H3-8 | Driven Shaft Weldment | 2 |
| H3-9 | Hexagon Nut M12 | 6 |
| H3-10 | Full Thread Bolt M12×120 | 4 |
| H3-11 | Active Shaft | 1 |
| H3-12 | Deep Groove Ball Bearing 6206 | 6 |
| H3-13 | Thickened Shaft Circlip | 3 |
| H3-14 | Active Bearing Upper Seat | 1 |
| H3-15 | Splined Hub | 1 |
| H3-16 | Spacer Sleeve | 2 |
| H3-17 | V-belt B1120 | 2 |
| H3-18 | Driven Pulley | 2 |
| H3-19 | Type A Flat Key 8×7×18 | 2 |
| H3-20 | 10 mm Spacer | 3 |
| H3-21 | Driven Bearing Lower Housing | 2 |
| H3-22 | Hole Circlip | 3 |
| H3-23 | Extra Large Plain Washer 10 | 8 |
| H3-24 | Threaded Base | 4 |
| H3-25 | Nut Base | 3 |
| H3-26 | Hex Lock Nut M16×1.5 | 3 |
| H3-27 | Adjusting Spacer | 3 |
| H3-28 | Full Thread Bolt M10×25 | 6 |
| H3-29 | Saw Blade 450 | 3 |
| H3-30 | Active Bearing Lower Housing | 1 |
| H3-31 | Hex Lock Nut M10 | 6 |
| H3-32 | Type A Flat Key 8×7×36 | 1 |
| H3-33 | Main Drive Pulley | 1 |
| H3-34 | Shim 2 | 1 |

Diagram H4-Hydraulic Drive Assembly

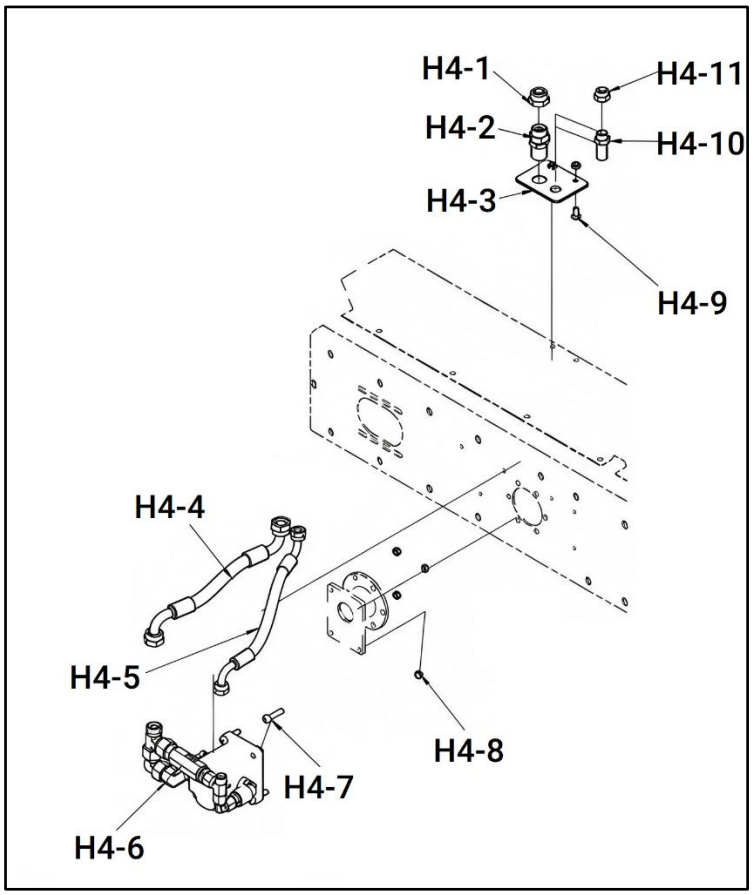


| No. | Specification | Qty |
|---|---|---|
| H4-1 | Plug | 1 |
| H4-2 | Straight Union Fitting M26×1.5 | 1 |
| H4-3 | Fixed Plate | 1 |
| H4-4 | Oil Return Pipe | 1 |
| H4-5 | Suction Pipe | 1 |
| H4-6 | Motor Assembly | 1 |
| H4-7 | Hexagon Socket Head Cap Screw M8×35 | 4 |
| H4-8 | Hex Lock Nut M8 | 6 |
| H4-9 | Full Thread Bolt M8×16 | 2 |
| H4-10 | Straight Union Fitting | 1 |
| H4-11 | Plug | 1 |

Diagram J-Motor Components

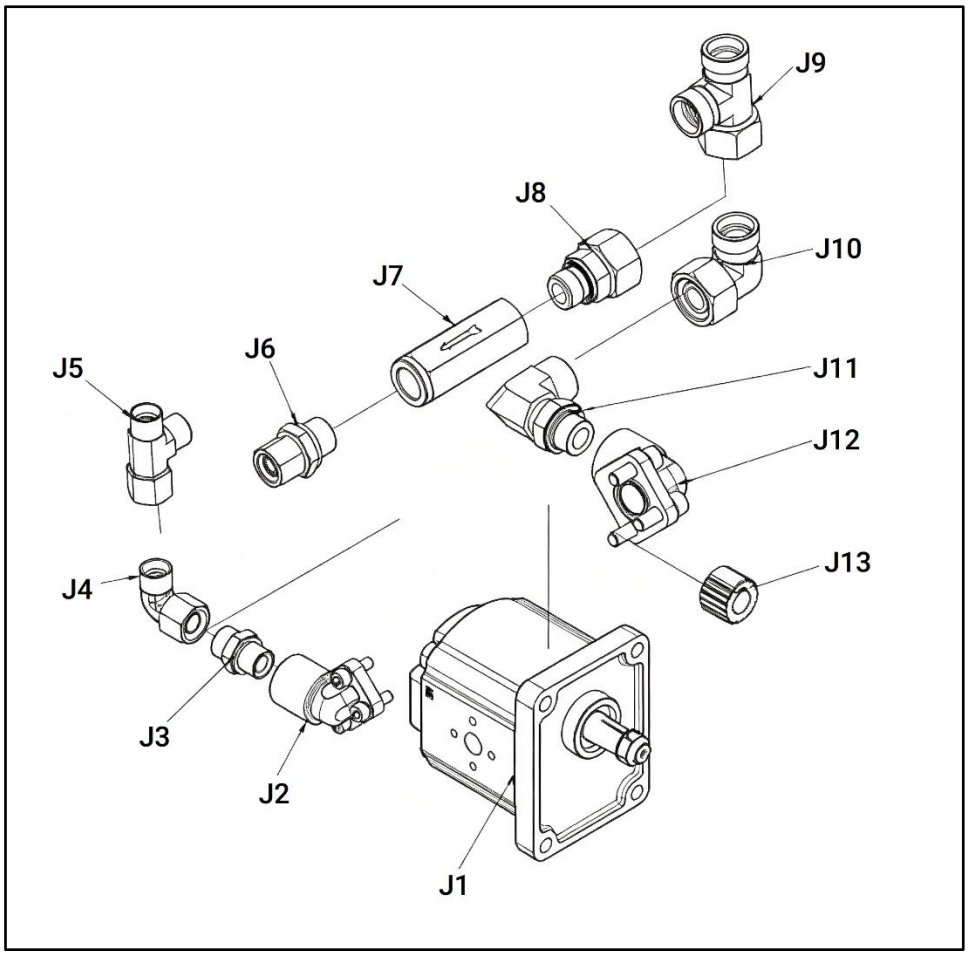


| No. | Specification | Qty |
|---|---|---|
| J1 | Motor Assembly | 1 |
| J2 | Splined Hub | 1 |
| J3 | Motor Oil Return Port Connector Assembly G1/2M | 1 |
| J4 | Motor Oil Inlet Connector Assembly G3/8M | 1 |
| J5 | 90° Elbow Fitting | 1 |
| J6 | Check Valve G1/2 | 1 |
| J7 | Transition Fitting | 1 |
| J8 | Transition Fitting | 1 |
| J9 | Transition Fitting | 1 |
| J10 | Transition Fitting G1/2–M18×1.5 | 1 |
| J11 | Three-way Valve | 1 |
| J12 | Union Fitting M18×1.5-G3/8 | 1 |
| J13 | Elbow Fitting M18×1.5 | 1 |

Diagram K-External Oil Pipe Assembly

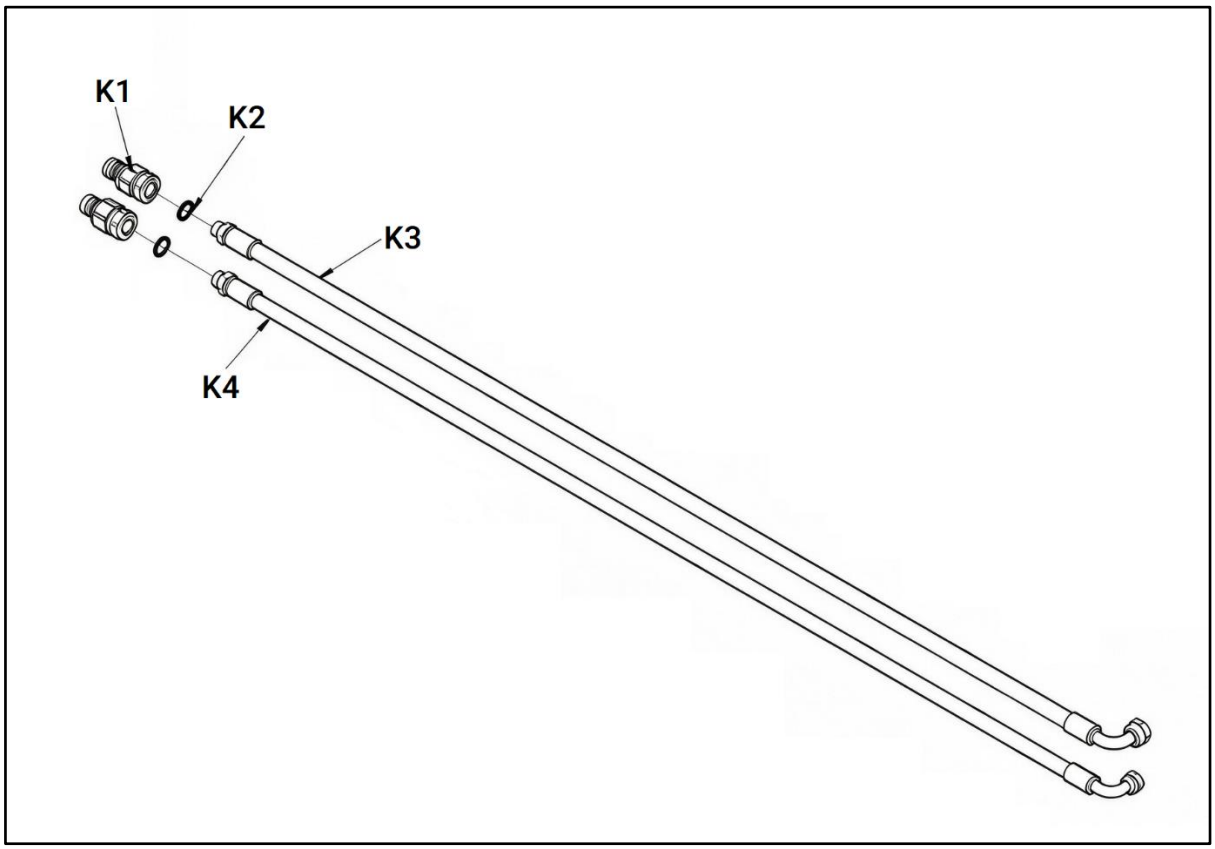


| No. | Specification | Qty |
|---|---|---|
| K1 | Quick Connect Fitting G1/2 | 2 |
| K2 | Assembly Washer 21.54 × 28.58 × 2.49 | 2 |
| K3 | External Oil Pipe | 1 |
| K4 | External Oil Pipe | 1 |

**WARRANTY INFORMATION:** Please refer to our website for detailed warranty conditions and coverage.
For the most up-to-date and comprehensive warranty information, visit **www.tmgindustrial.com**