TMG INDUSTRIAL®

TMG-GHA1111

PRODUCT MANUAL

v.2023.09.26

11.5' X 11.5' GREENHOUSE, 9' HEIGHT, ALPINE SERIES

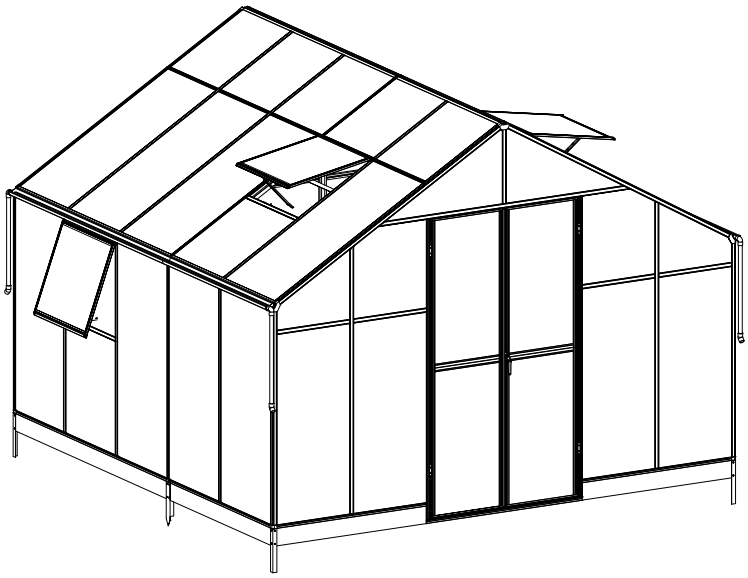

⚠ WARNING

- **Please read and understand the product manual completely before assembly**
- **Check against the parts list to make sure all parts are received**
- **Wear proper safety goggles or other protective gears while in assembly**
- **Do not return the product to dealer. They are not equipped to handle your requests.**

Missing parts or have questions on assembly?
Please call: 1-877-761-2819 or email: cs@tmgindustrial.com

CONTENTS

1. Assembly Advice .....Page 1
2. Product Features .....Page 2 - 3
3. Parts List .....Page 4 - 6
4. Door Assembly .....Page 7 - 10
5. Roof Vent Assembly .....Page 11 - 13
7. Base Assembly .....Page 14 -16
8. Framework & Glazing Assembly .....Page 17 - 35

Assembly and Maintenance Advice

1. For safety purposes, we strongly recommend that this product is assembled by at least two people.
2. Some components have sharp metal edges. Please be careful when handling metal components. Please wear gloves, shoes and safety goggles during assembly.
3. Lay all of the components on a soft carpet or blanket to avoid any scratches or damages.
4. DO NOT climb or stand on the roof. Heavy articles should not be leaned against the greenhouse.
5. Keep the roof and gutter clear of snow, dirt & leaves. Allowing snow to build up on the roof may damage the product.
6. Unlike steel, if the paint finish is scratched this will not harm the aluminium underneath.
7. When your product needs cleaning, use a mild detergent solution and rinse with cold clean water. Do not use acetone, abrasive cleaners or strong detergents to clean the panels.

Tools Provided:

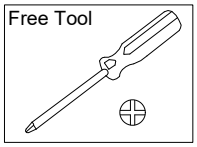

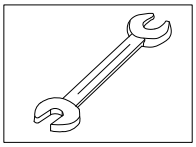

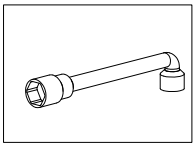

Tools Required when Assembly (Not Provided)

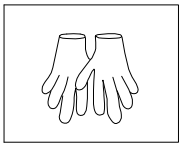

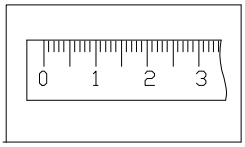

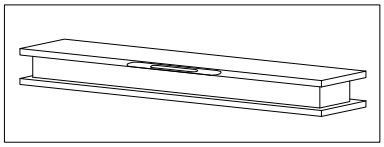

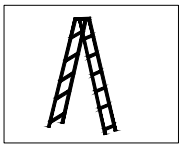

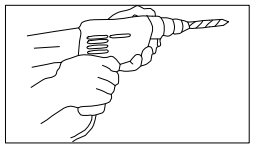

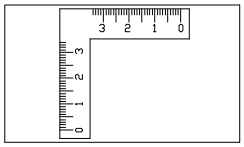

Assembly at least by two Persons

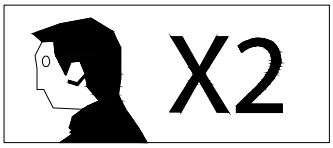

Important:

Rubber is not provided if you choose polycarbonate sheet as glazing panel.

Functions and Features:

1. The strong two part eaves beam includes an integral gutter. Downpipes are also included as standard so you can collect rainwater.

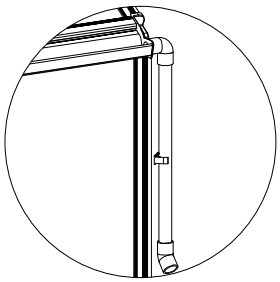

2. Manual window handles are included as standard with the roof vents. If required, automatic roof vent openers are available as an inexpensive optional extra.

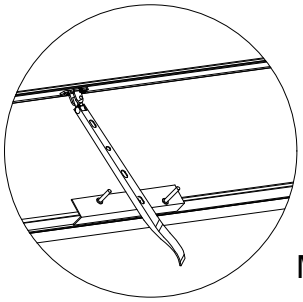

Manual Opener

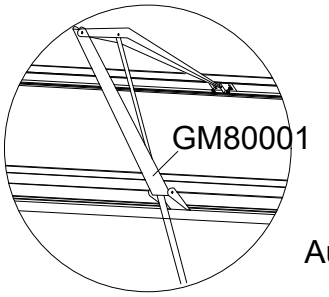

Automatic Opener

GM80001 is sold separately

3. Remove approximately 2 inches of film from all sheet edges before installing and remove all film immediately after the construction is completed. Please ensure that the side with the white film faces outwards.

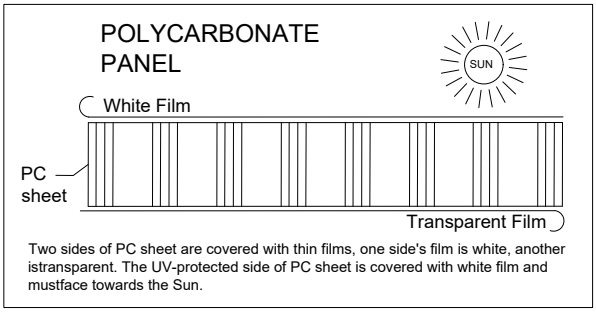

4. This quality greenhouse features self-tapping screws to provide strong joints. As the name suggests, the screws tap their own thread. Driving in self-tapping screws requires more force than conventional screws. A powered screwdriver is therefore recommended.

5. Nuts not to be tightened before the end of assembly! Unless otherwise stated, do not tighten the bolts/nuts/screws until the shed is finally erected!

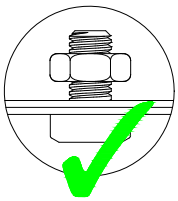

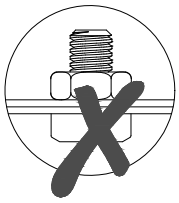

6. S26 and S27 are mostly installed on the profiles. Please remove S26 and S27 before installation.

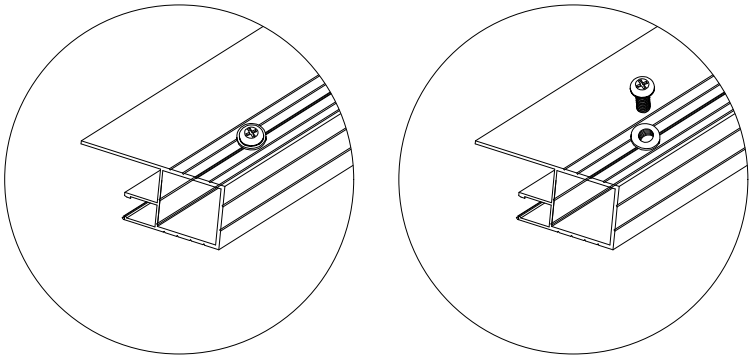

7.If the polycarbonate slot is deformed during transport, use a flat wooden or plastic block to straighten it (Avoid sharp objects to prevent damage to the aluminum).

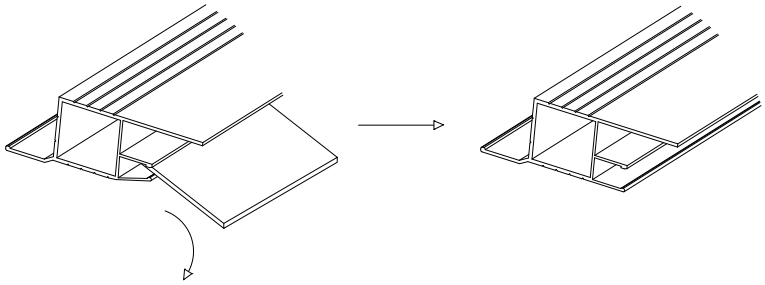

	PART	NO	QTY	
1	1971mm	L02B	2 2 2	6
2	1843mm	L02E	1	
		L02F	1	
3	530mm	L02H	2	
4	2045mm	L03A	1	
	2046mm	L13A	1	
5	2045mm	L03B	1	
	2046mm	L13A	1	
6	657mm	L04B	4 4 4	12
7	2031mm	L05C	4	
8	1344mm	L06B	1	
9	2032mm	L06C	1	
10	2032mm	L07C	2	
11	1344mm	L08B	2	
12	2032mm	L08C	2	
13	2056mm	L09C	2	
14	1971mm	L10B	2	
15	650mm	L25	4	

door

	PART	NO	QTY
16	549mm	L15A	4
17	2029mm	L16A	2
18	486mm	L17	2
19	2029mm	L18A	1
		L18B	1

PART	NO	QTY
A1:1174 B1:1771 C1:2074 D1:1386	A1	2
	B1	2
	C1	2
	D1	2
	D306	4
	D307	3
	D330	2

	PART	NO	QTY	
1	1475mm	L01A	2 2	4
1	1971mm	L01B	2	
2	1971mm	L01C	2	
3	1475mm	L02A	2 2 2	6
4	1925mm	L02G	1	
5	1843mm	L02C	1	
		L02D	1	
6	1925mm	L03C	2	
7	557mm	L04A	5 5	10
8	1143mm	L05A	5	
9	1343mm	L05B	4	
10	1344mm	L07B	2	
11	1143mm	L08A	3	
12	D&E:1143 F:1192	L08D	1	
		L08E	1	
		L08F	1	
13	1368mm	L09B	2	
14	1475mm	L10A	2	

M03

	PART	NO	QTY
15	680mm	L11A	2
		L12A	2
15	680mm	L11B	2
		L12A	2
17	648mm	L19	8
18	680mm	L20	4
19	680mm	L21	4

PART	NO	QTY
	S05 M6X12	36
	S105 M5X10	192
	S26 M5X12	60
	S28 M4X10	8
	S69 M6X60	16
	M03 M6	36
	M02 M4	8
	M05 M5	200
	Z02 Ø4X16D	34
	Z08 M4.2X16	6
	Z17 M4.8X16	8

PART	NO	QTY
	A03	4
	A51	4
	A79	4
	D05	25
	D25	2
	D26	1
	D114	16
	D329	6
	D341	4
	J93	4
	J94	4
	J166	4
	A95L J168L	2
	A95R J168R	2
	A96 J169	4
	A97 J170	6
	A98 J171	3
	J172R	2
	J172L	2
	J173	2

PART	NO	QTY
	H152	1
	D47	1
	S76 M4X32	2
	H192	1
	H201	2
	A89-1	2
	A89-2	2

Tools Provided:

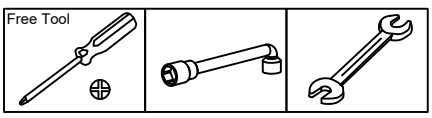

PART	NO	QTY
	Y1	2
	Y2	2
	Y3	2
	Y4	2
	Y5	10
	Y6	8
	Y7	8
	Y9	12
	Y10	4
	Y11	4
	Y13	2
	Y14	2
	Y15	2
	Y16	2

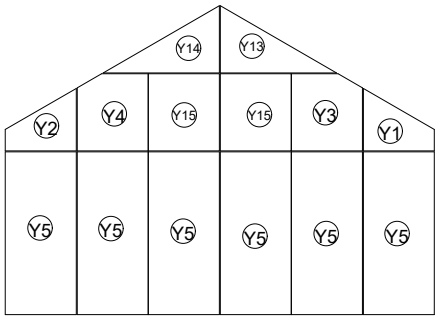

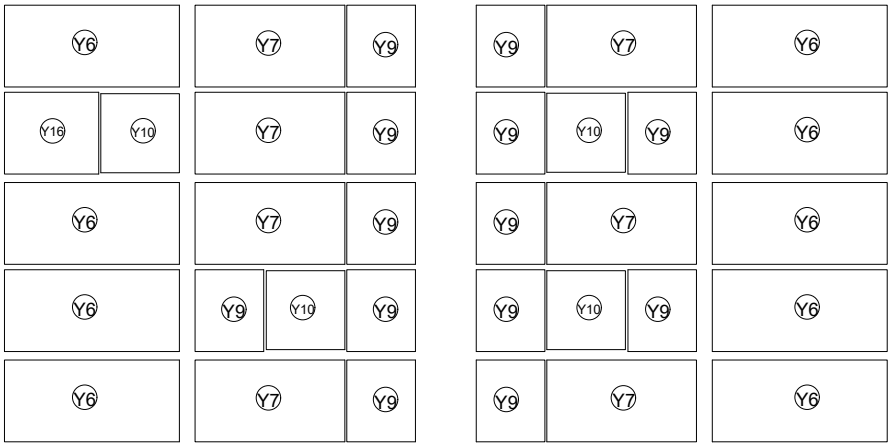

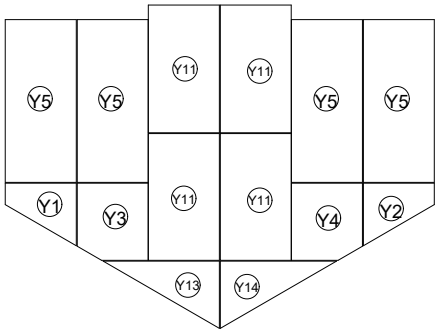

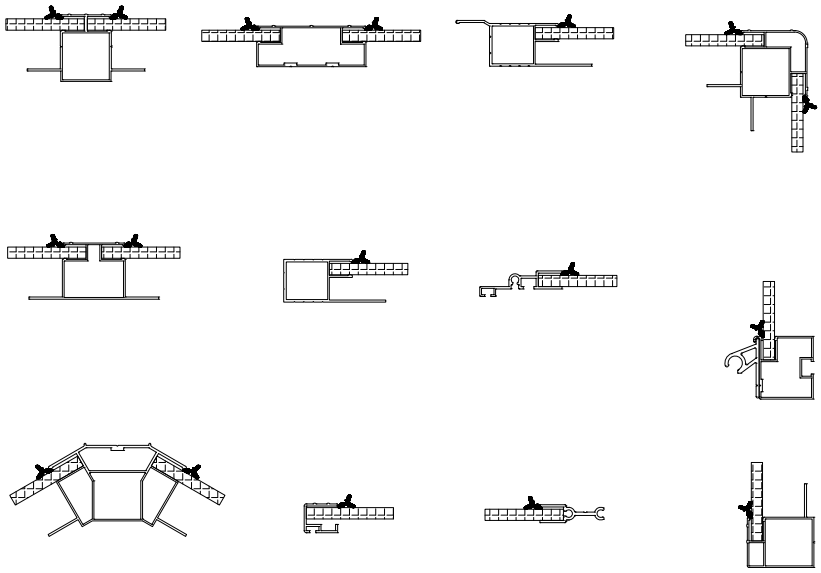

Rubber for walls & roof
(Provided for glass only)

PART	NO	QTY
	J107	207M

PART	NO	QTY
	J107	134M

Rubber for walls only
(Provided for glass only)

PART	NO	QTY
	L15A	2
	L16A	1
	L17	1
	L18B	1
	S26 M5X12	8
	M05 M5	4
	Y11	2
	H192	1
	H201	2
	A89-2	1
	S84 M4X20	2
	S89 M3X12	2

Left Door

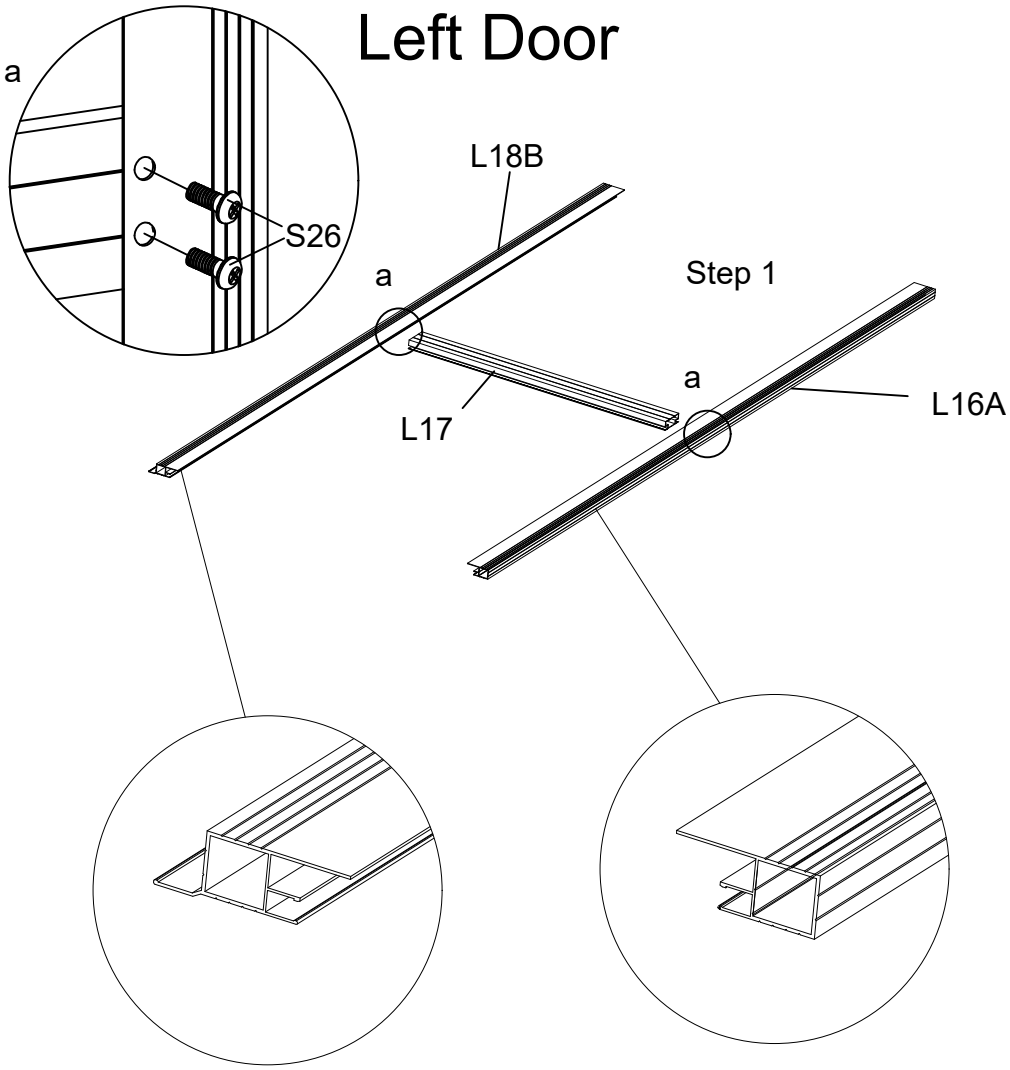

! Attention: Check the direction of the accessories

Step 2

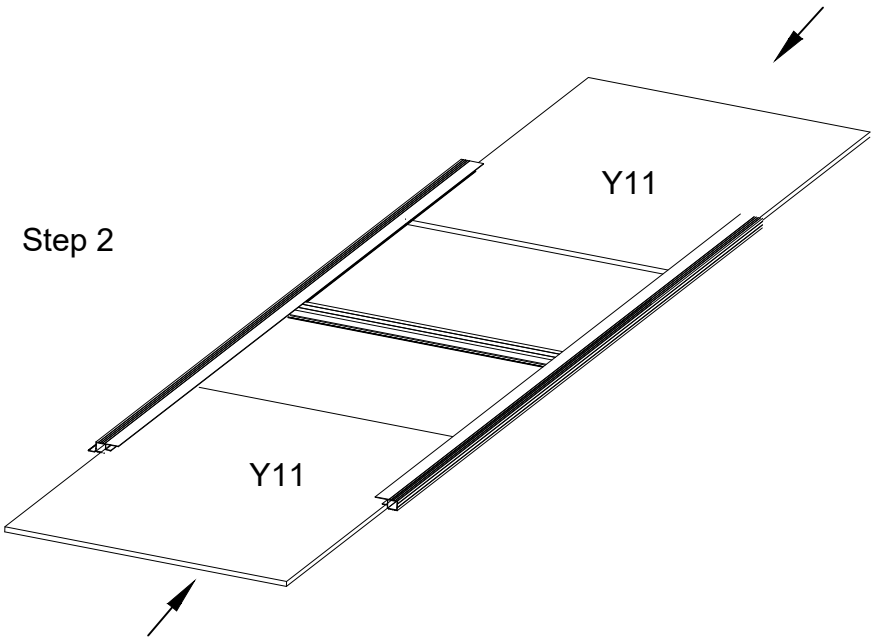

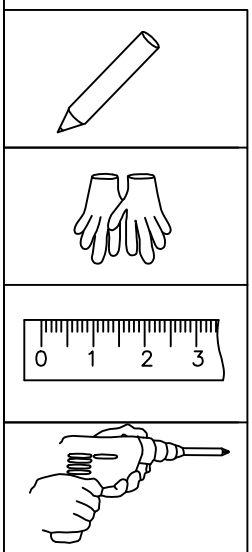

! Attention:Remove the protective films from both sides of each polycarbonate panel, before inserting into aluminum channels. Ensure the milky white film faces towards the Sun.

The inner side view of the door.

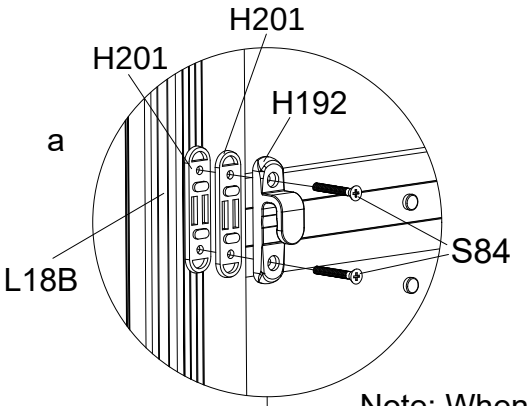

The outer side view of the door.

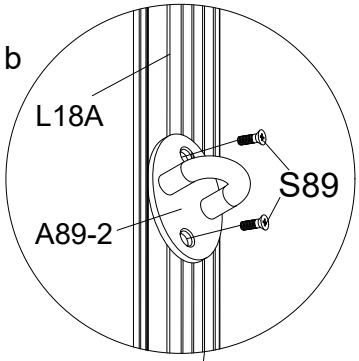

Note: When installing accessory H192,
the opening must face down,
as shown in the diagram.

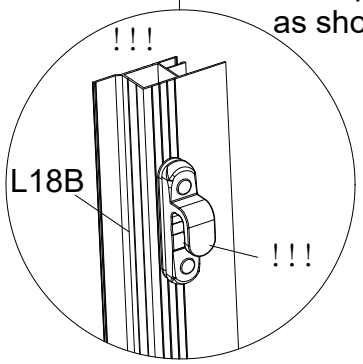

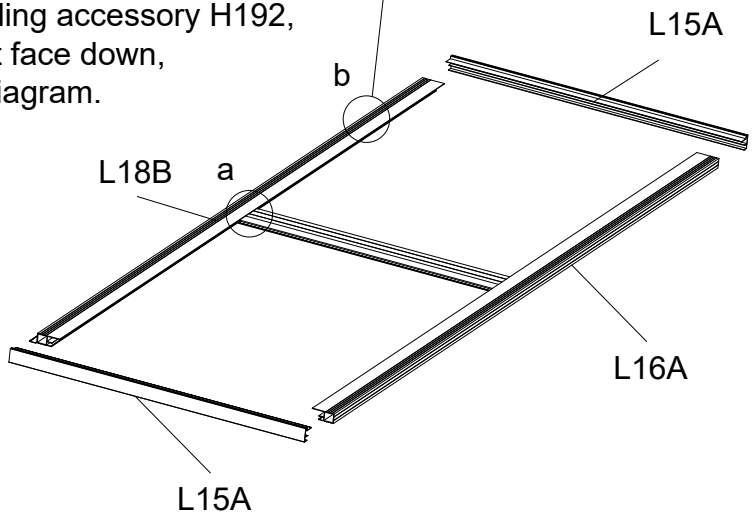

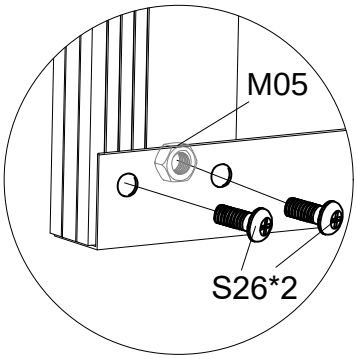

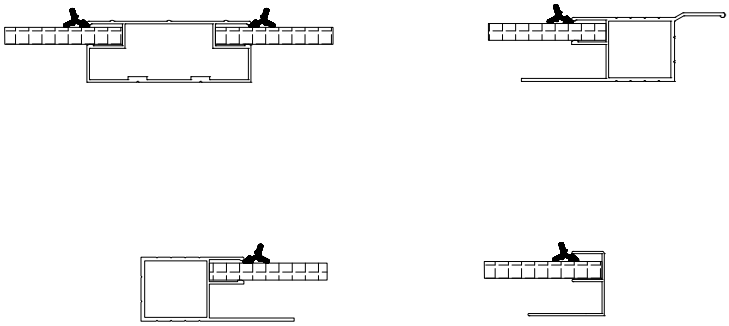

After completing the above installation steps, install rubber strip J107

PART	NO	QTY
	L15A	2
	L16A	1
	L17	1
	L18A	1
	H152	1
	D47	1
	S26 / M5X12	8
	S76 / M4X32	2
	M05 / M5	4
	Y11	2
	A89-2	1
	S89 / M3X12	2

Right Door

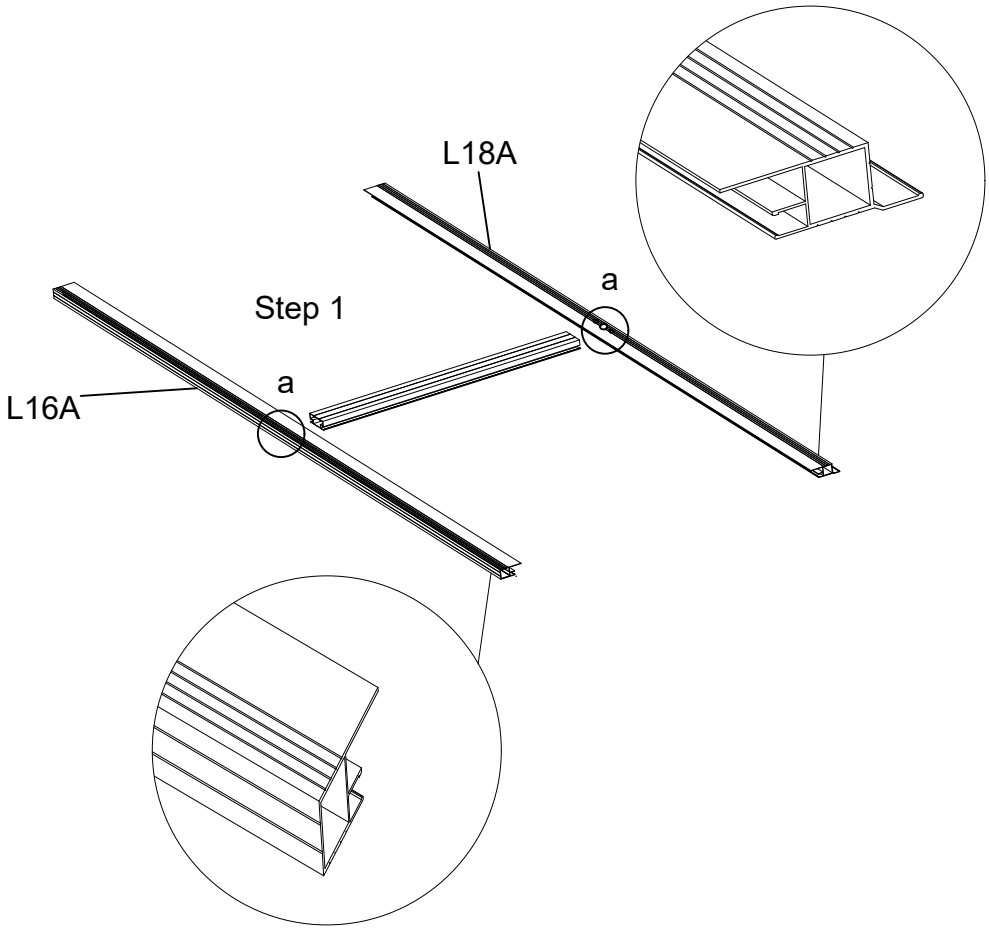

! Attention: Check the direction of the accessories

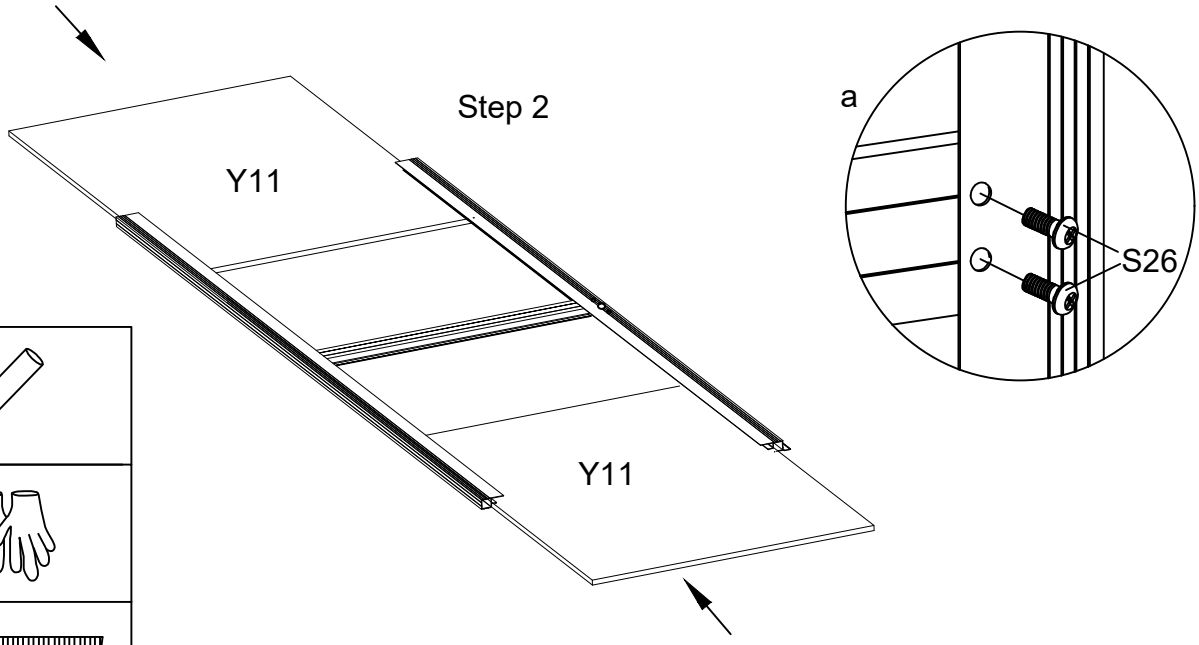

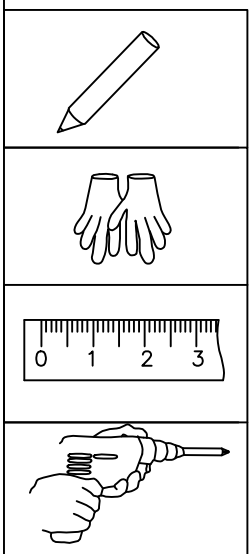

! Attention:Remove the protective films from both sides of each polycarbonate panel, before inserting into aluminum channels. Ensure the milky white film faces towards the Sun.

The outer side view of the door.

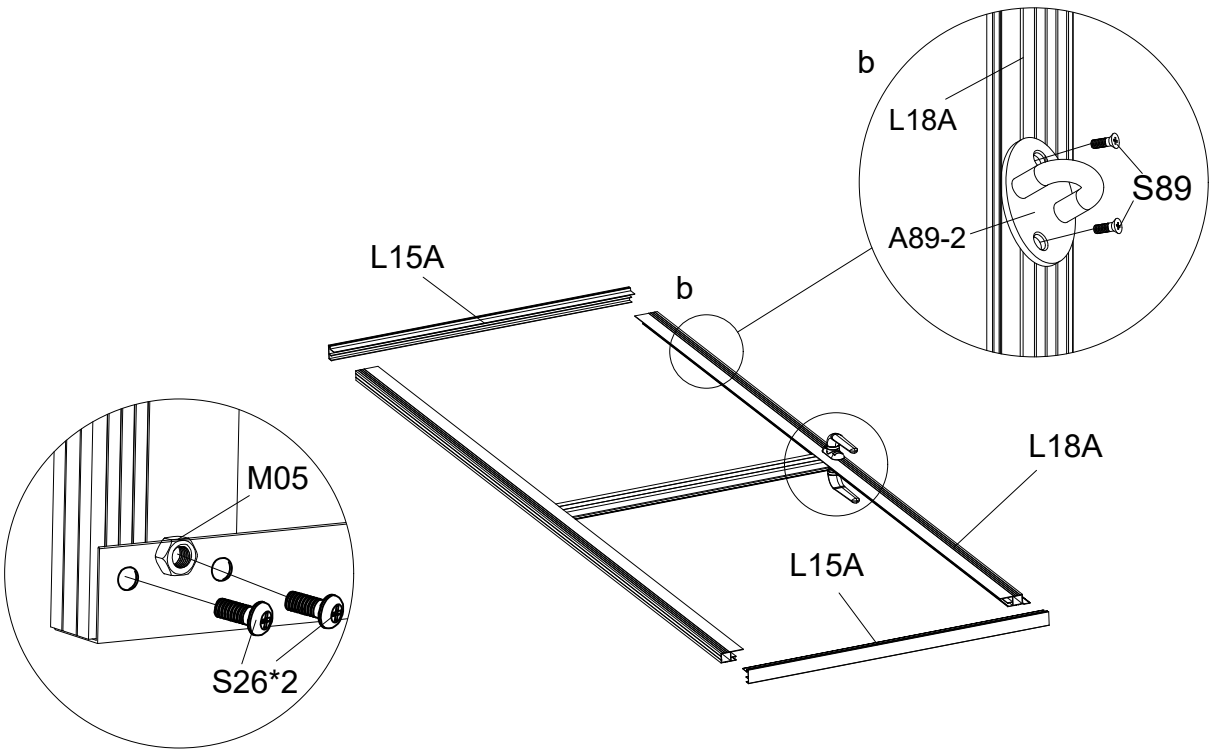

Install H152 after installing the door, when installing, pay attention to the H152 long end toward the door edge, H42 square hole aligned with the square column D47 while inserting, placed in the right position and then fixed with S76 , and finally installed on the decorative cover

Pay attention to the intallation direction

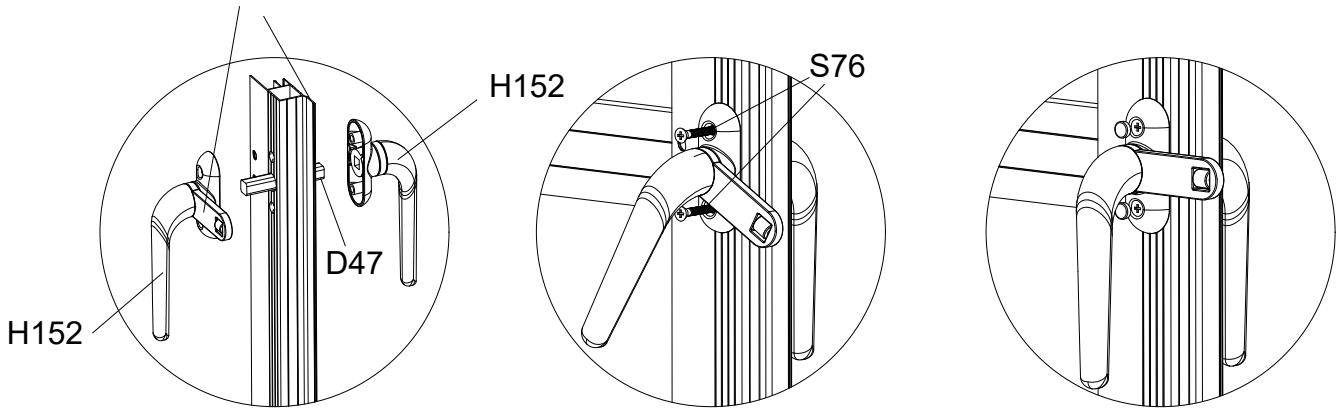

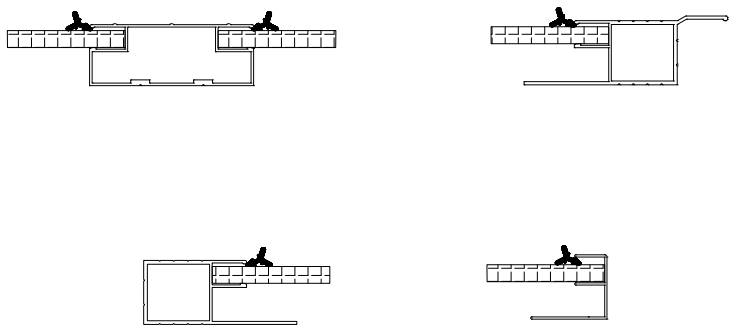

After completing the above installation steps, install rubber strip J107

PART	NO.	QTY.
	L11A	2
	L12A	2
	L11B	2
	L12A	2
	L19	8
	L20	4
	L21	4
	Y10	4
	A79	4
	Z02 Ø4X16D	24
	S28 M4X10	8
	M02 M4	8

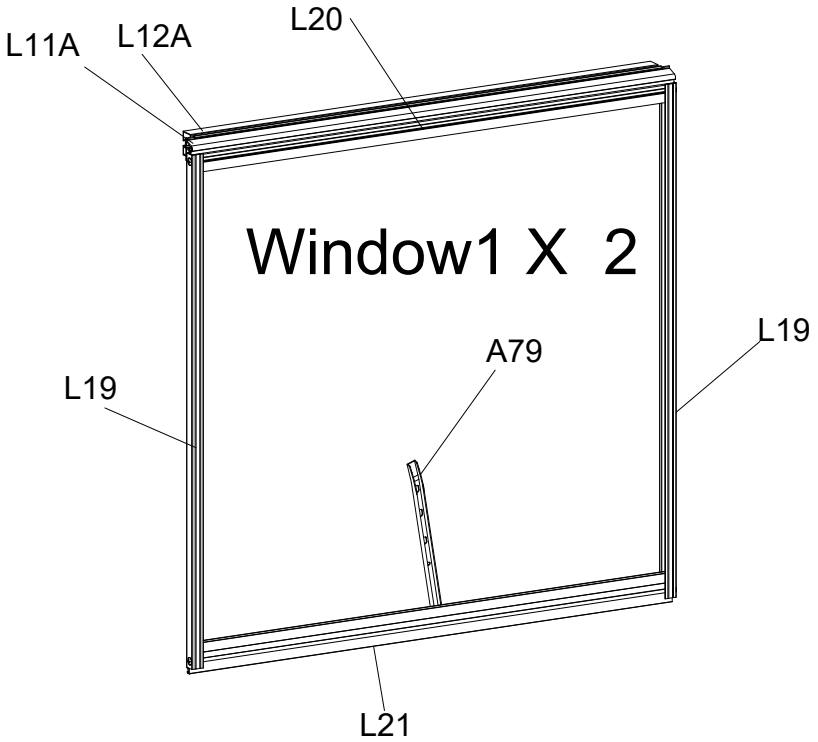

The difference between Window1 and Window2 is the installation position of L11, L11B is installed around the walls, L11A is installed on the top.

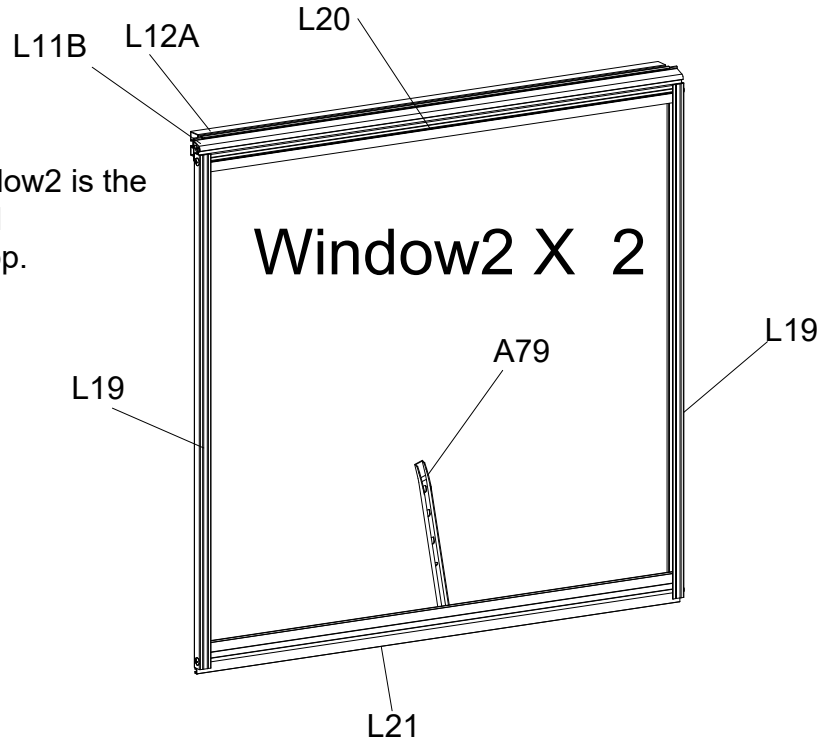

PART	NO.	QTY.
	L11A	1
	L12A	1
	L19	2
	L20	1
	L21	1

Part	NO.	QTY.
	Y10	1
	A79	1
	Z02 Ø4X16D	6
	S28 M4X10	2
	M02 M4	2

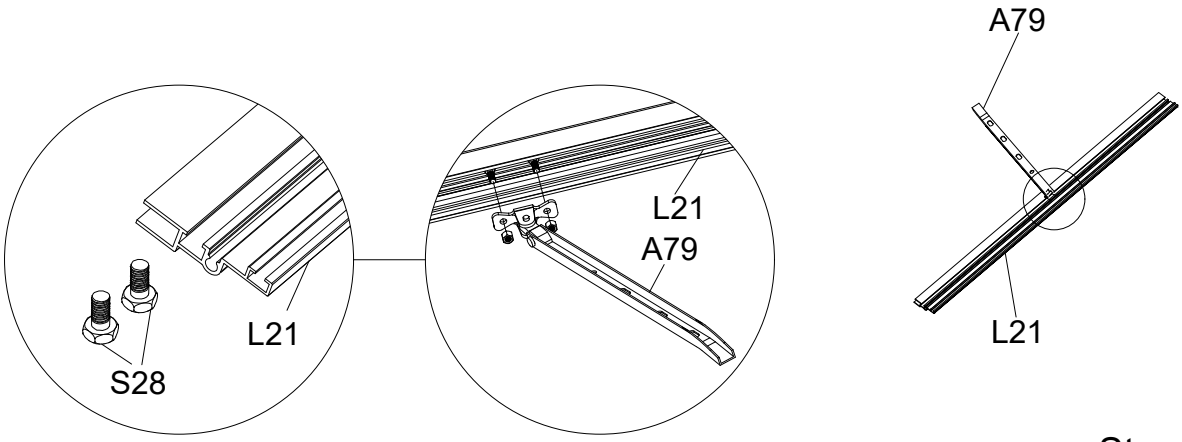

Step 1

! Attention:Remove the protective films from both sides of each polycarbonate panel, before inserting into aluminum channels. Ensure the milky white film faces towards the Sun.

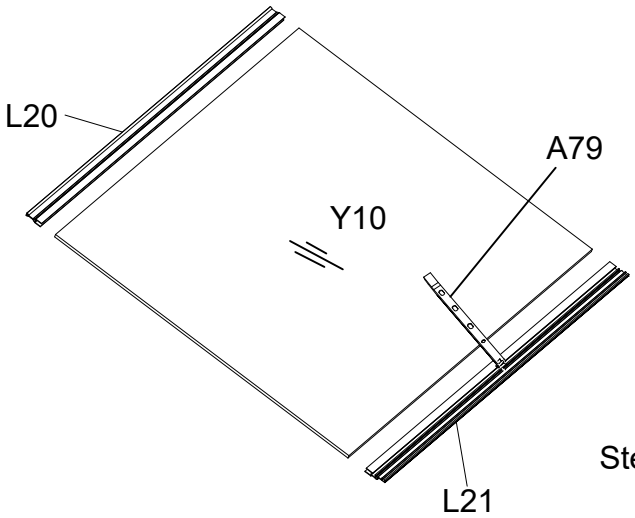

Step 2

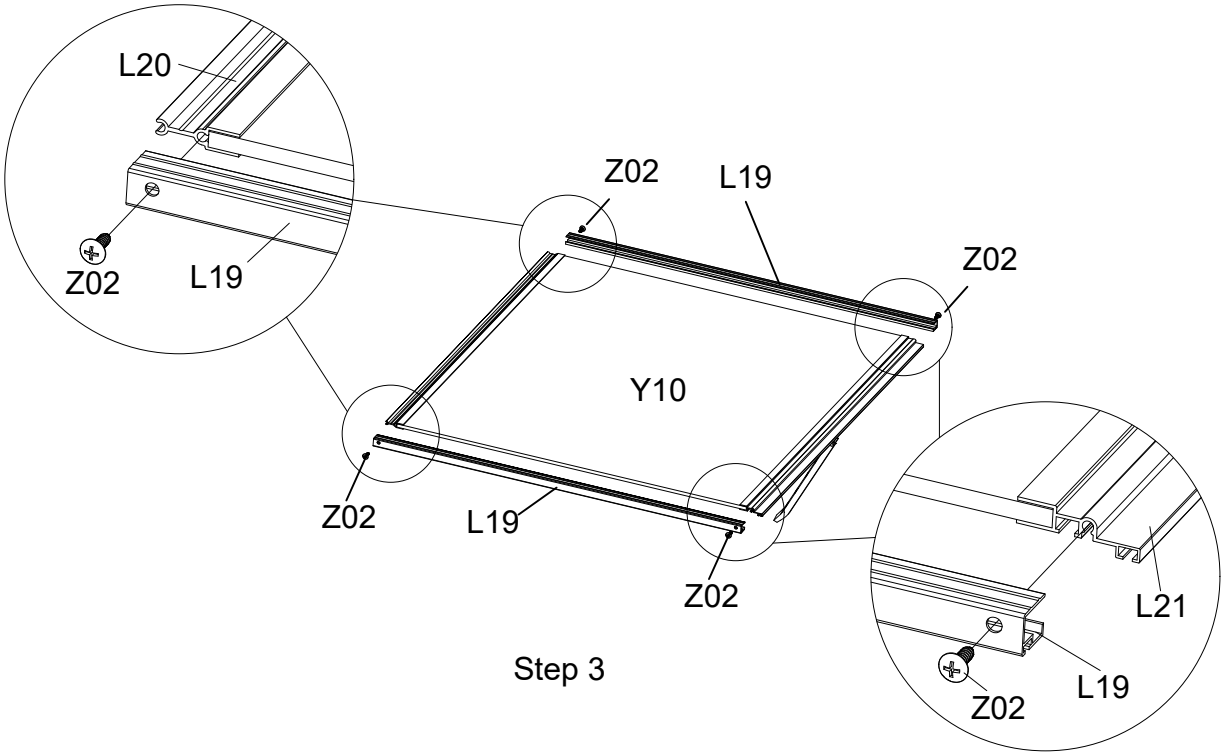

Step 3

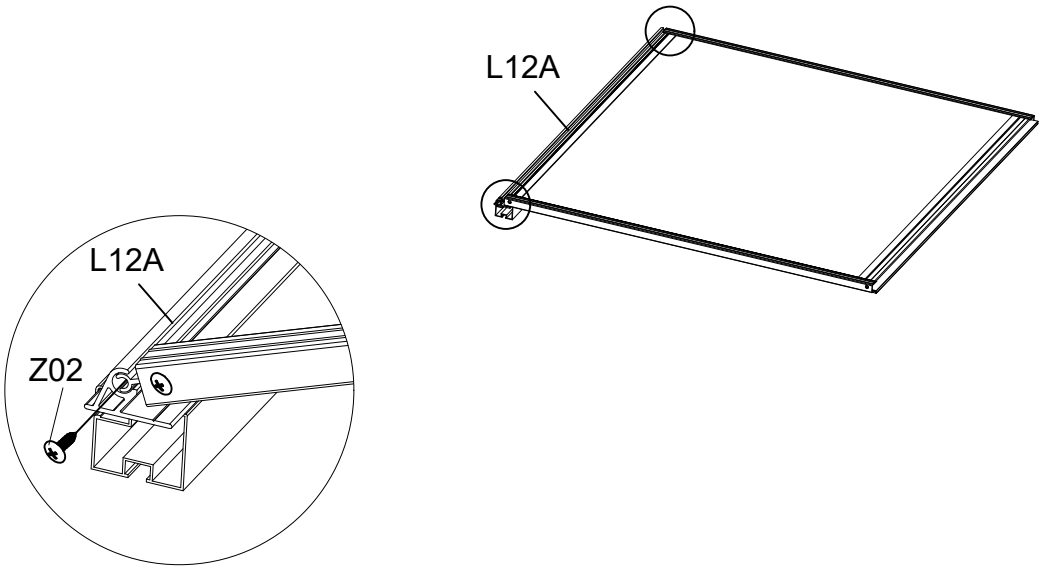

Four windows are standard

PART	NO	QTY
	A1	2
	B1	2
	C1	2
	D1	2
	D306	4
	D307	3
	S05 M6X12	28
	M03 M6	28

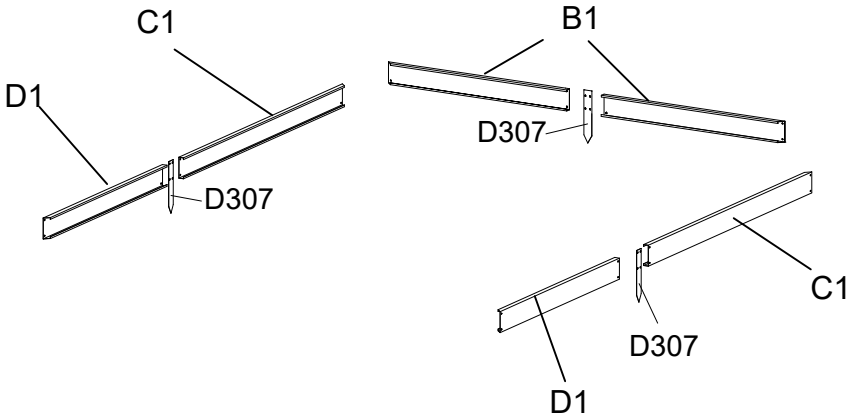

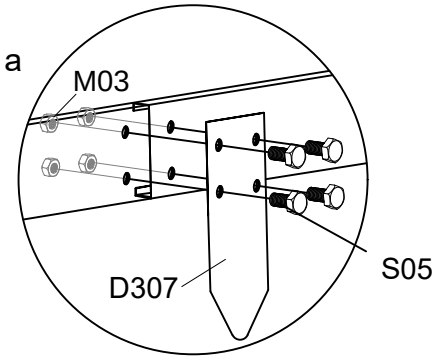

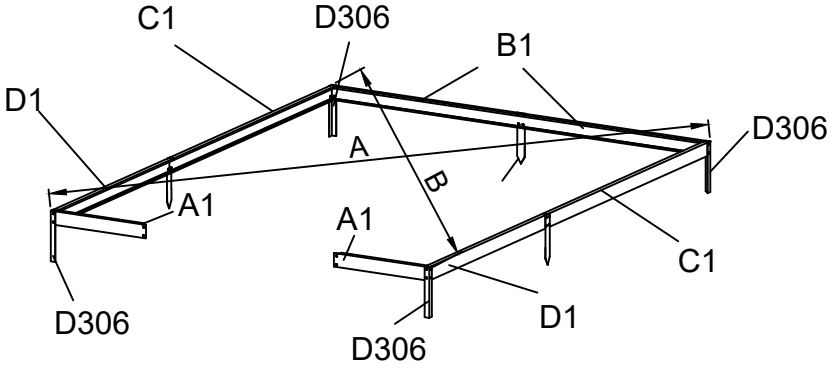

Attention! D306 and D307 must be inserted into the soil or installed in reverse!

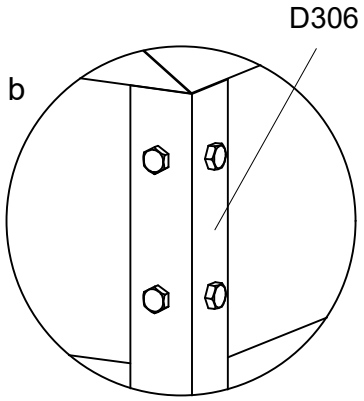

Ⓐ = Ⓑ

Fix the base before assembly the greenhouse. This is the way to fix the base.

! Attention:Turn over the steel plinths D306 & D308 to complete the base installation as shown below, when the greenhouse is NOT inserted and secured into the soft soil.

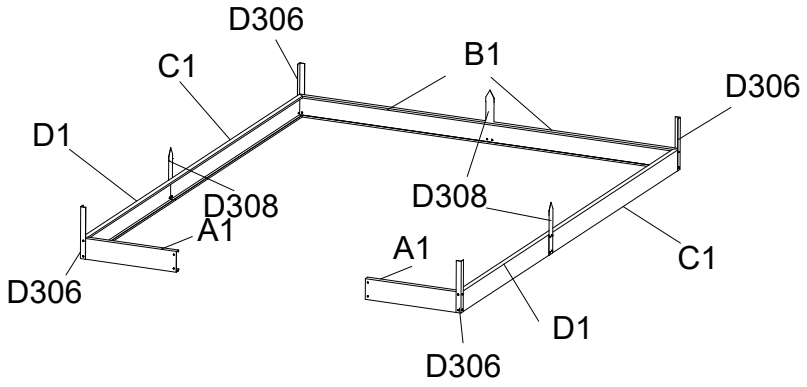

PART	NO	QTY
	D114	16
	S69 M6X60	16

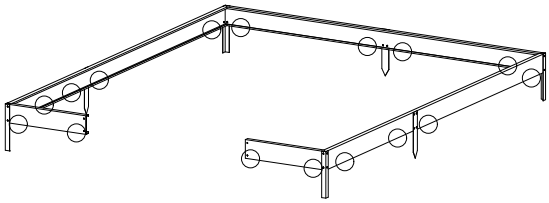

1. Fix the base anchor clip D114 onto each base section with a distance of 5~10CM from each end.
2. Mark the middle of the D114 hole to drill the Ø8 hole, then use S69 to fix the D144 to the ground

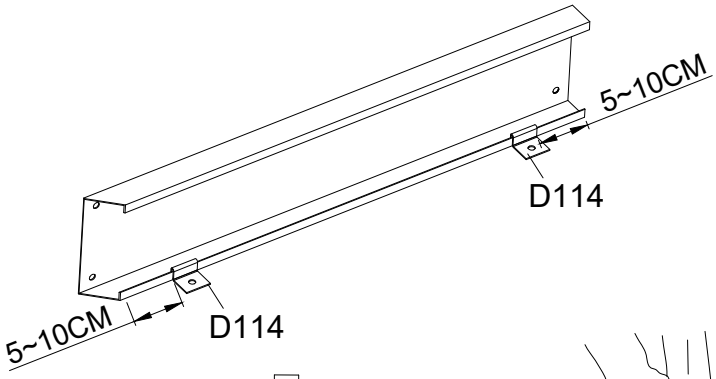

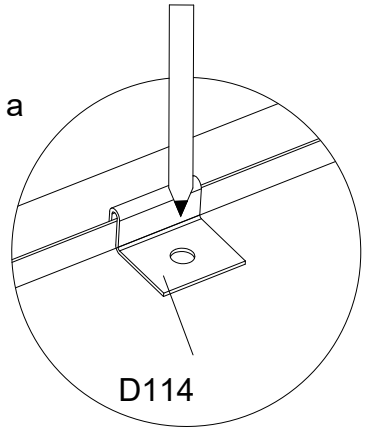

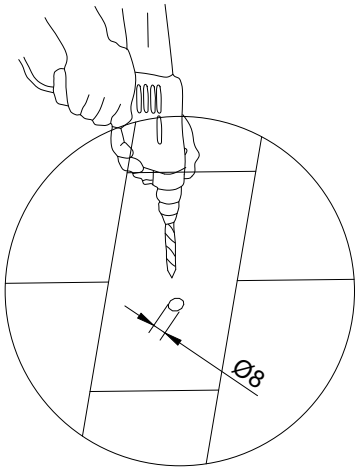

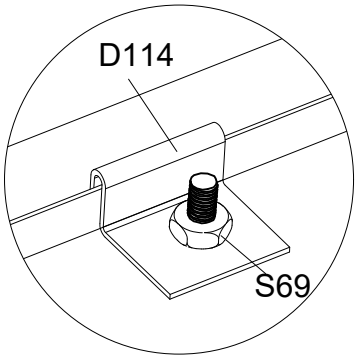

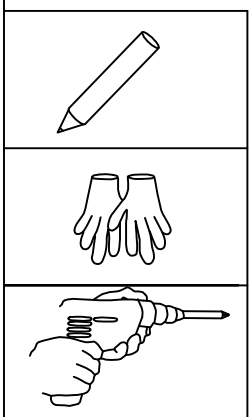

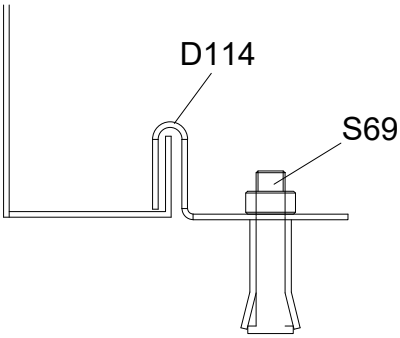

PART	NO	QTY
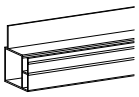	L08A	3
	L08B	2
	L08C	2
	L08D	1
	L08E	1
	A95L J168L	2
	A95R J168R	2
	A96 J169	4
	D05	25
	S26 M6X12	12

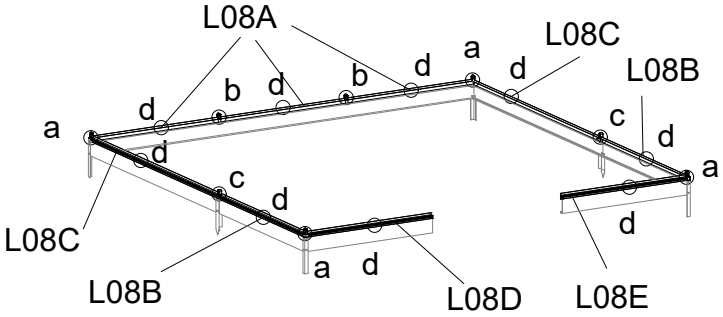

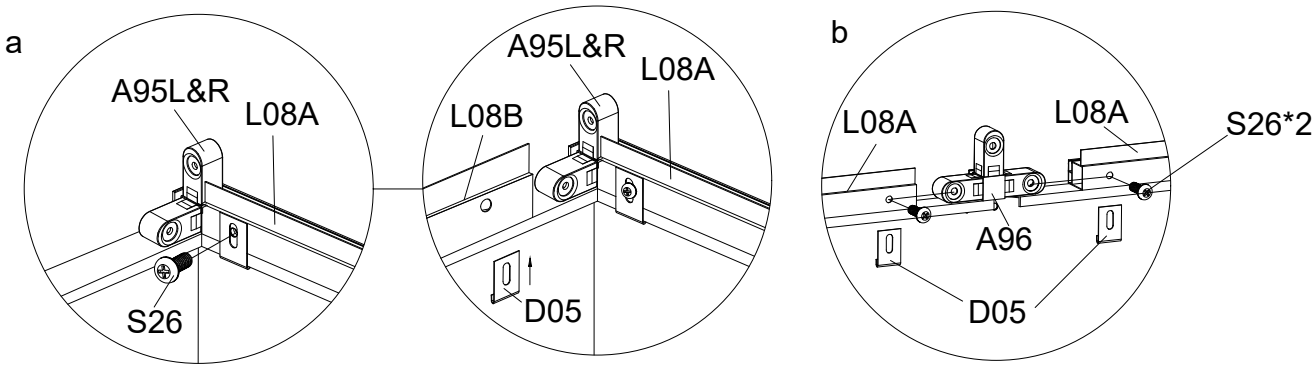

Attention! The hole above A95L&R faces towards L08B direction

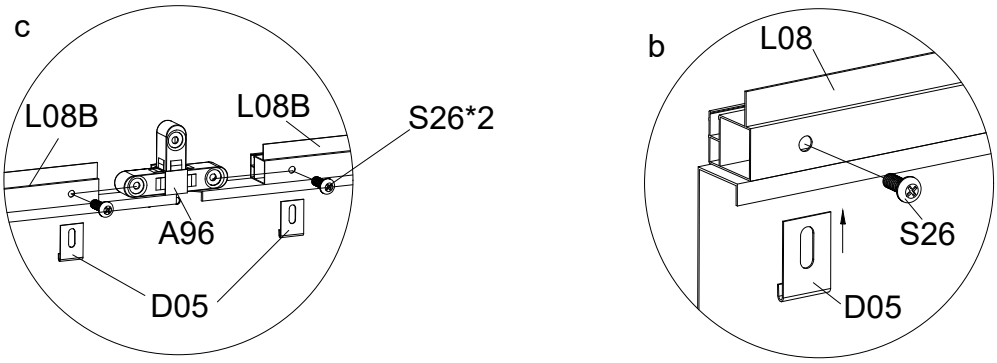

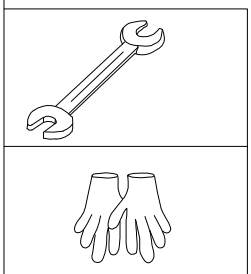

PART	NO	QTY
	L01A	4
	L03C	2
	L10A	2
	S26 M6X12	8

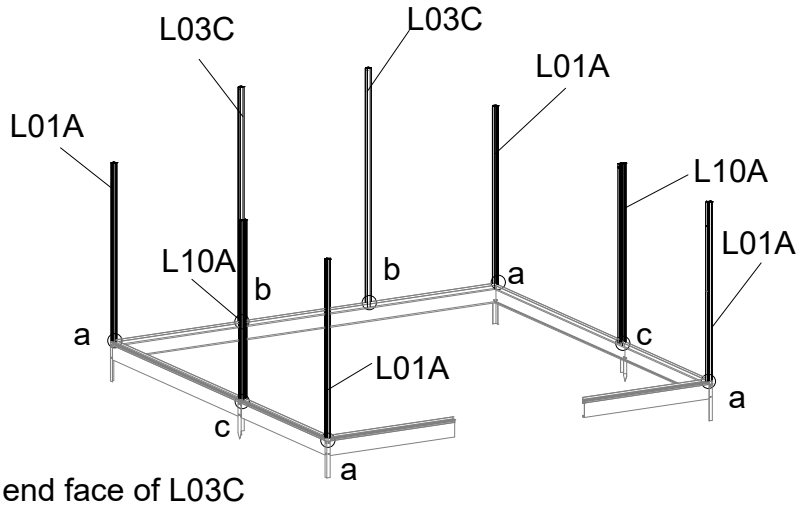

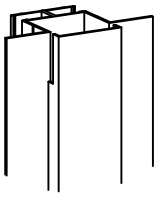

Attention! The end face of L03C
with a notch facing upwards

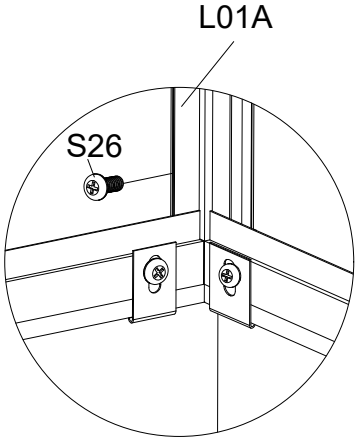

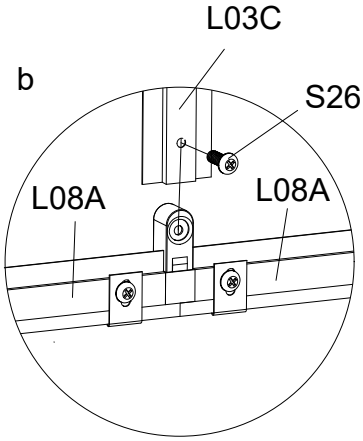

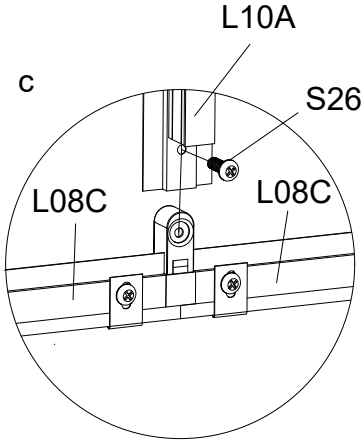

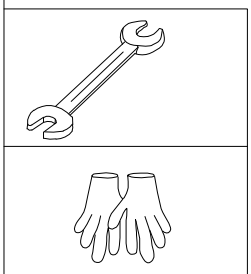

PART	NO	QTY
	L05A	3
	L05B	2
	L05C	2
	S105 M5X10	14
	M05 M5	14

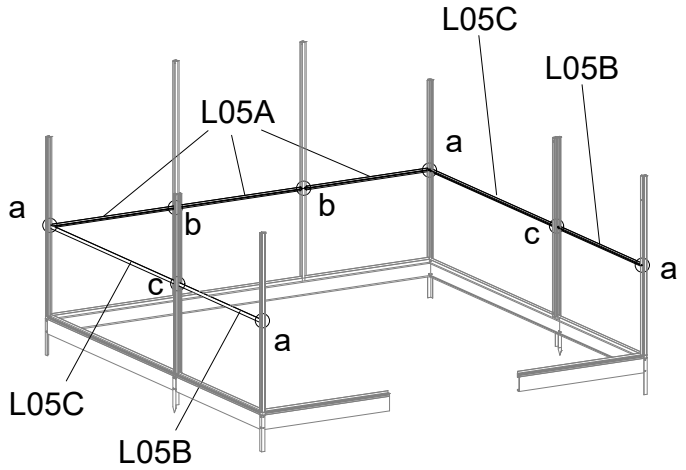

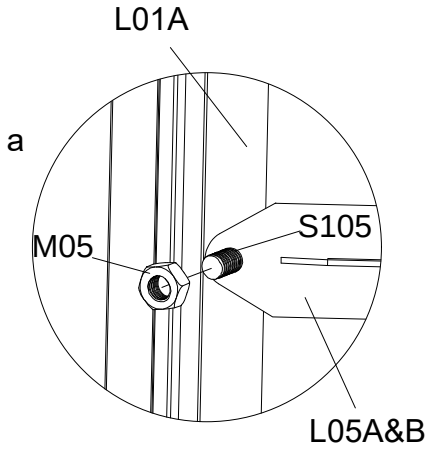

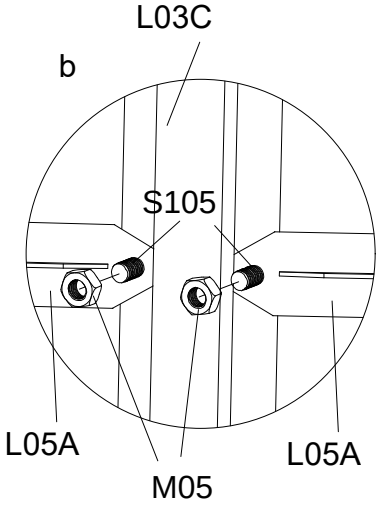

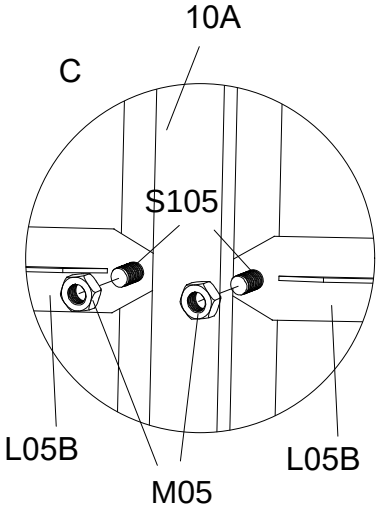

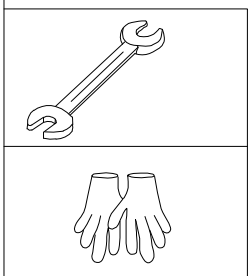

PART	NO	QTY
	L03A	1
	L03B	1
	L05A	2
	L08F	1
	D330	2
	S105 / M5X10	8
	M05 / M5	8
	S26 / M5X12	4
	S05 / M6X12	4
	M03 / M6	4

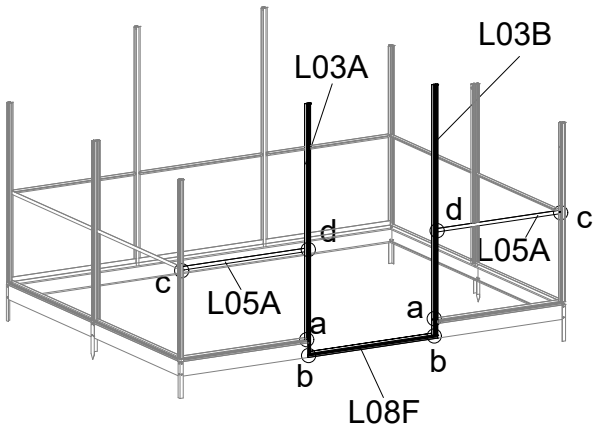

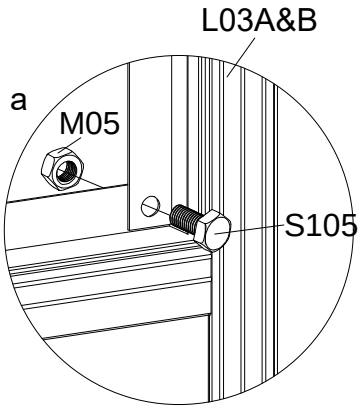

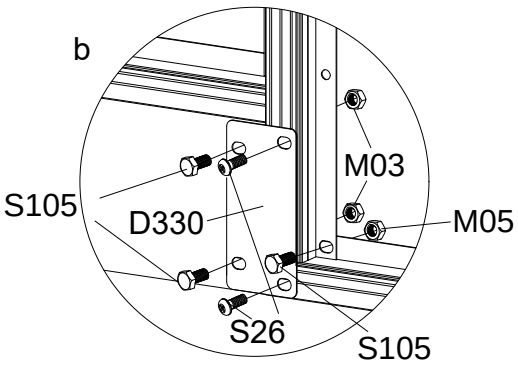

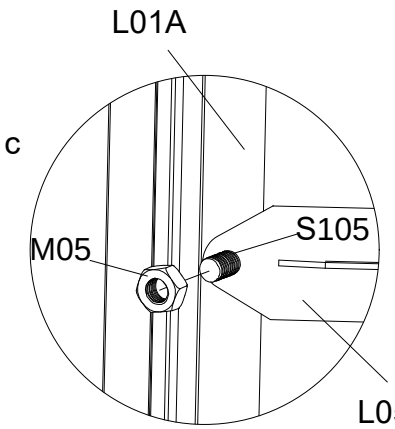

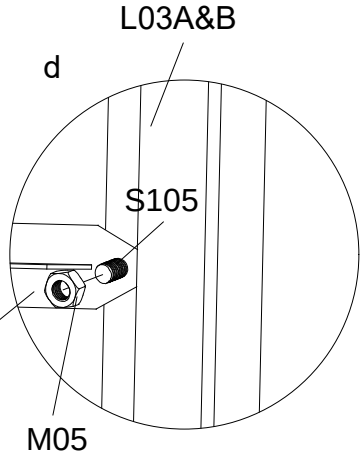

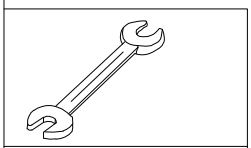

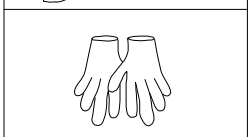

PART	NO	QTY
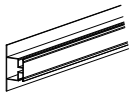	L02C	1
	L02D	1
	L02E	1
	L02F	1
	L02G	1
	S105 M5X10	10
	M05 M5	10
	S26 M5X12	10
	A89-1	2
	S89 M3X12	4

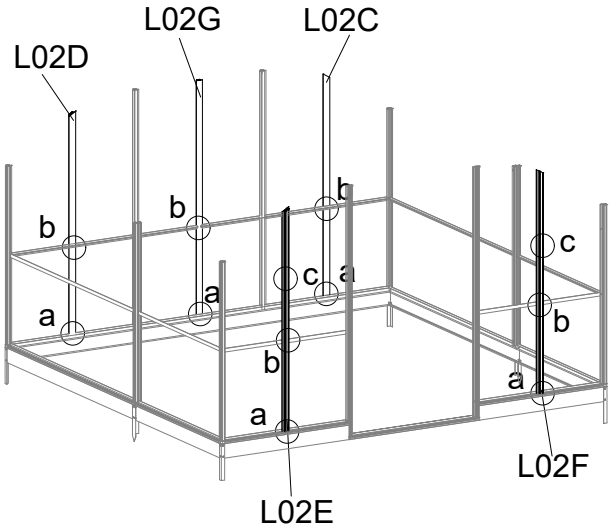

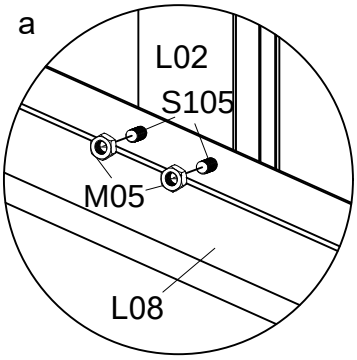

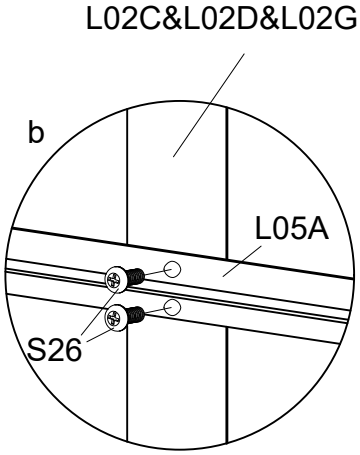

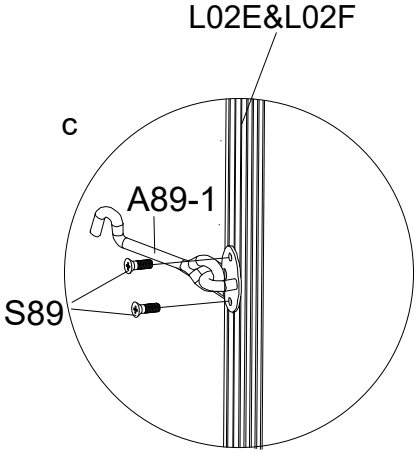

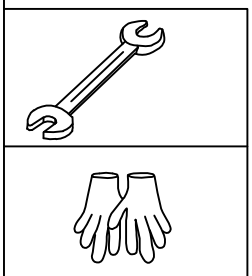

PART	NO	QTY
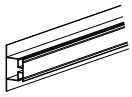	L02A	6
	S105 M5X10	12
	M05 M5	12
	S26 M5X12	12
	Y5	10

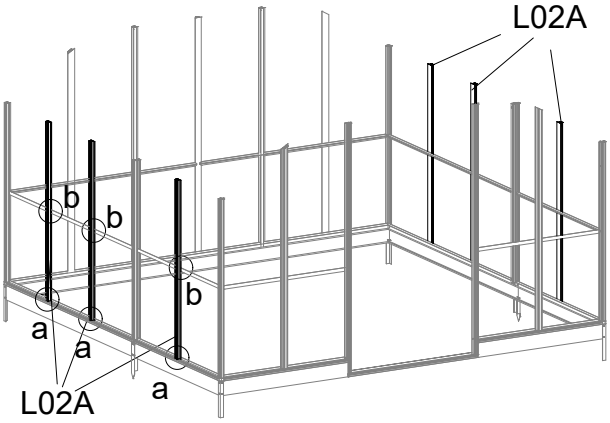

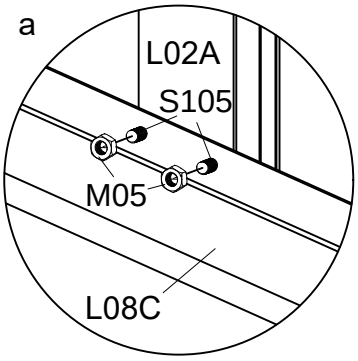

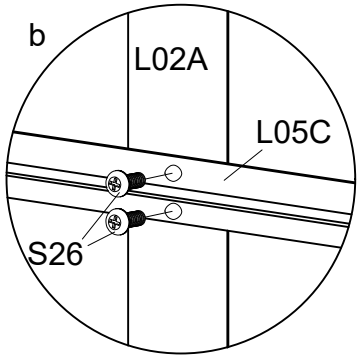

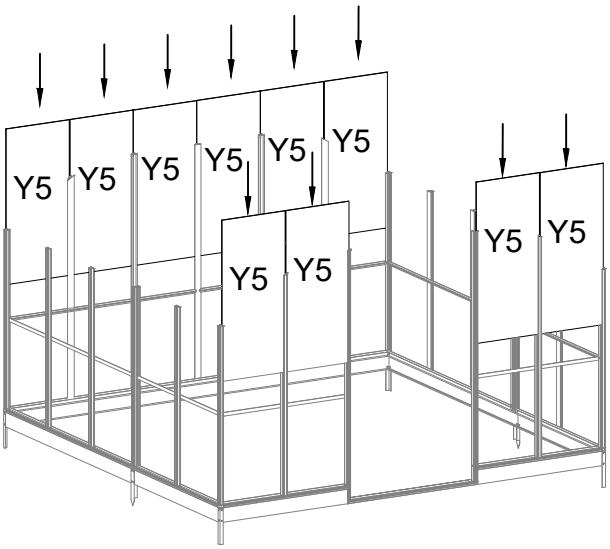

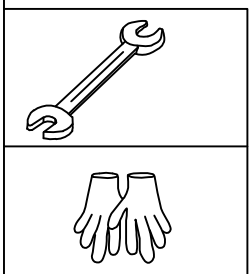

PART	NO	QTY
	L04A	10
	Y1	2
	Y2	2
	Y3	2
	Y4	2
	Y15	2
	S105 M5X10	20
	M05 M5	20

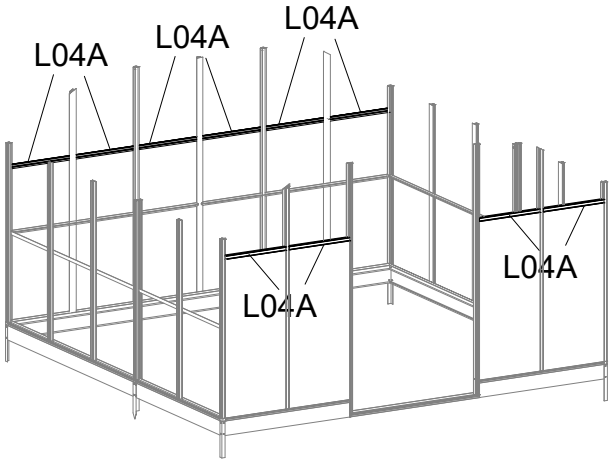

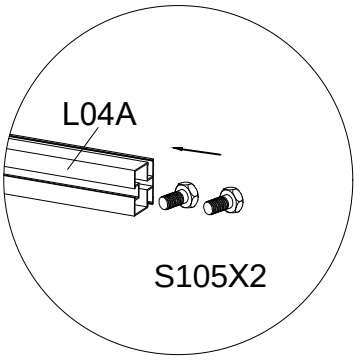

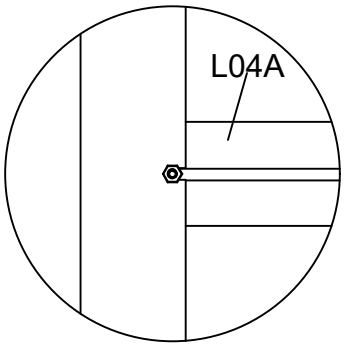

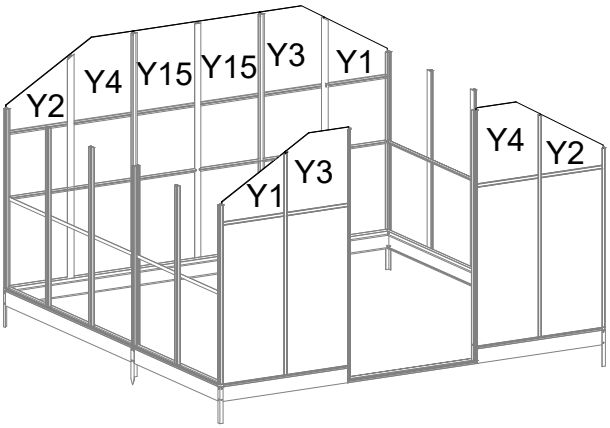

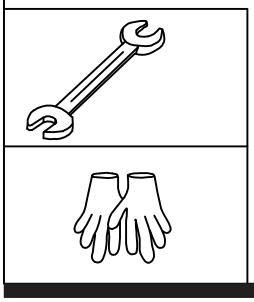

PART	NO	QTY
	L01B	2
	L01C	2
	L02H	2
	L13A	2
	S26 / M5X12	20
	A97 / J170	6
	S105 / M5X10	12
	M05 / M5	12
	D341	4
	Y13	2
	Y14	2

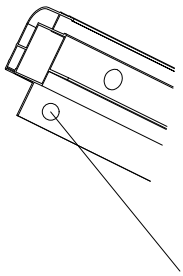

Attention! Close to the end face of L01B and L01C with a single hole, facing upwards

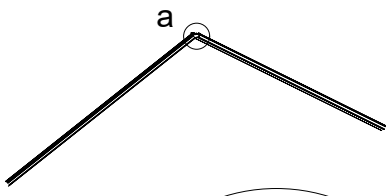

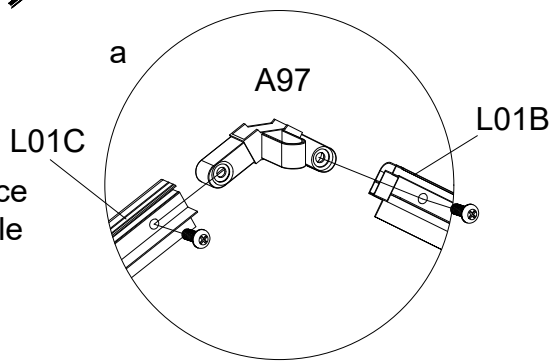

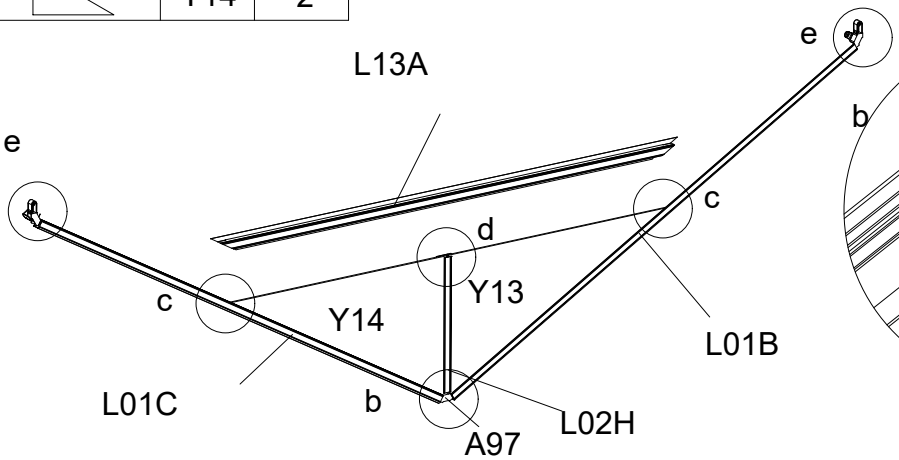

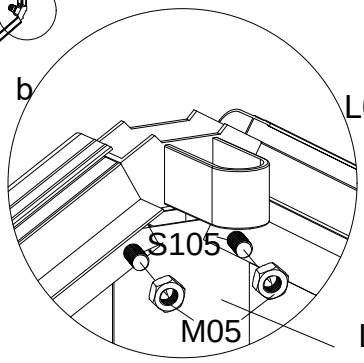

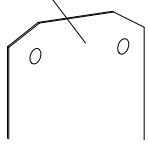

Attention! When installing L13A, it will be easier to install it upside down

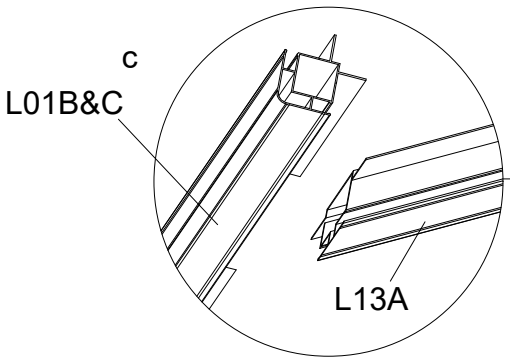

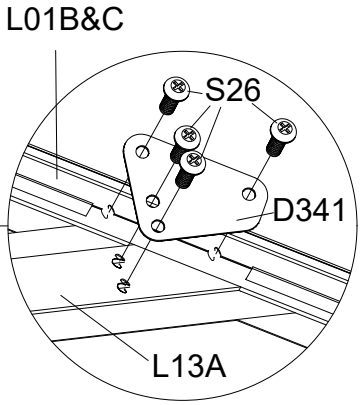

Attention! The end of L02H with chamfered upwards

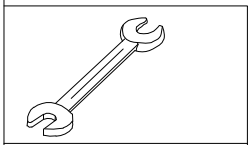

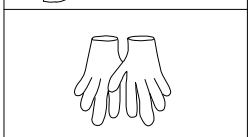

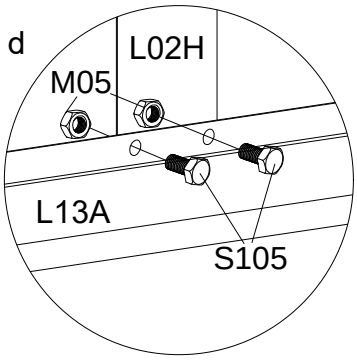

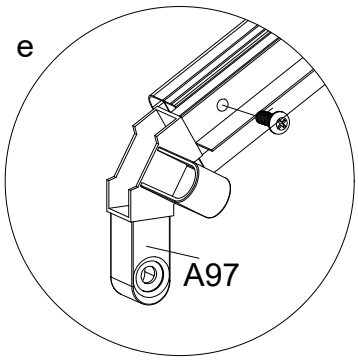

PART	NO	QTY
	S105 M5X10	18
	M05 M5	18
	S26 M5X12	4

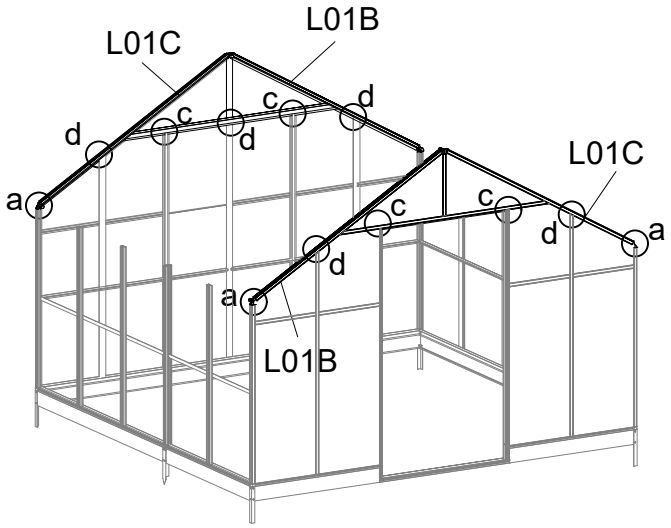

If the nut is difficult to install, use pliers to assist in installation

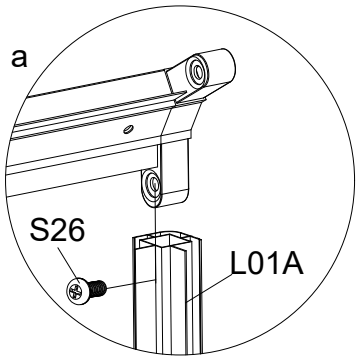

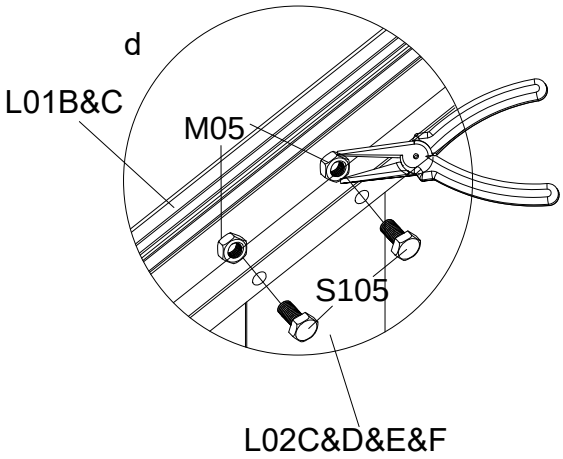

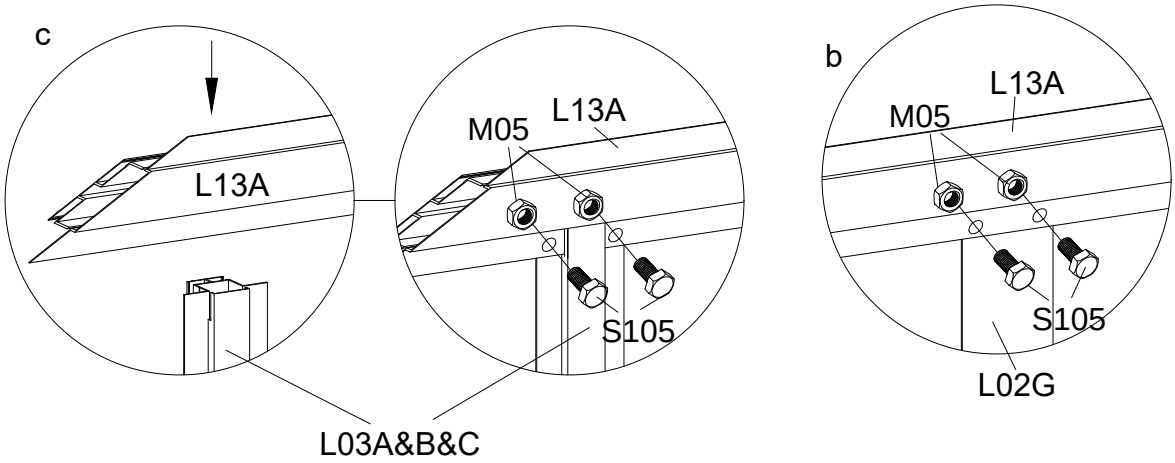

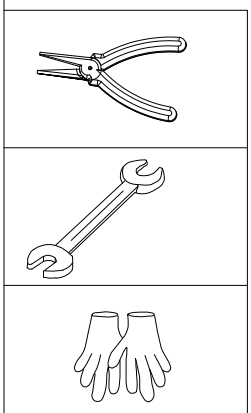

First, insert the surface below of L13A into the gap of L03A&BC, and then fix it with S105&M05

PART	NO	QTY
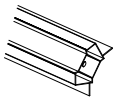	L07B	2
	L07C	2
	A98 / J171	2
	S26 / M5X12	8
	S105 / M5X10	12
	M05 / M5	12
	Y6	8

Put the panels into positions

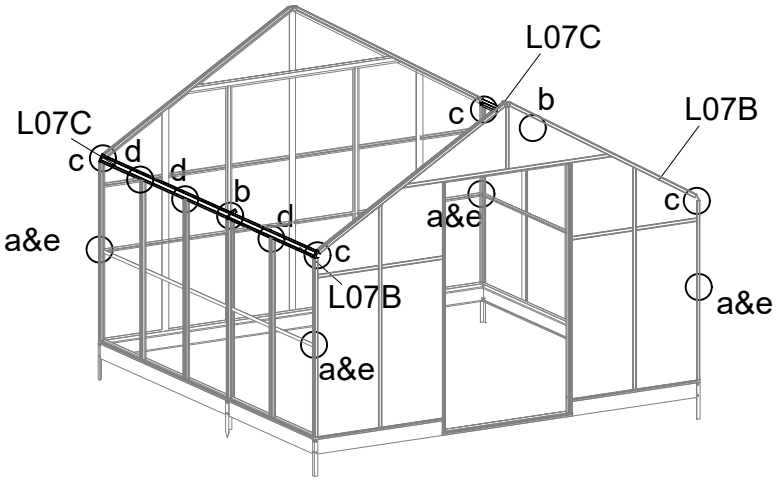

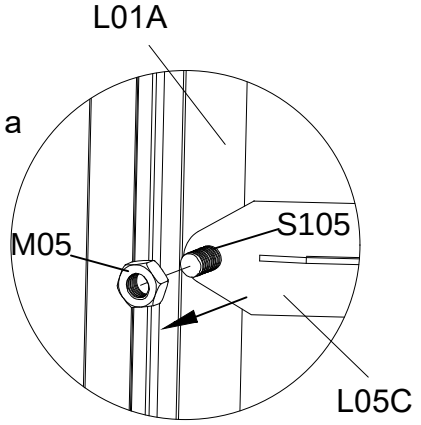

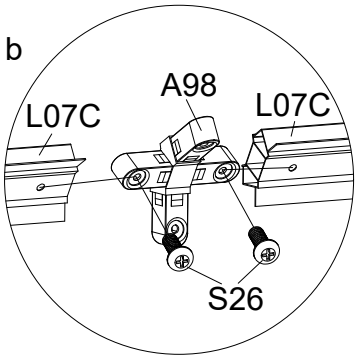

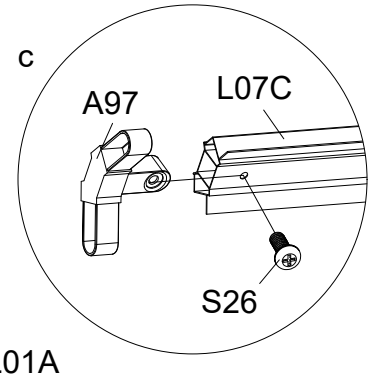

Loosen the screws at the four corners of L01A and L05C before installing L07C

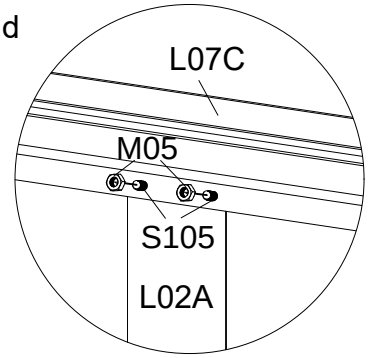

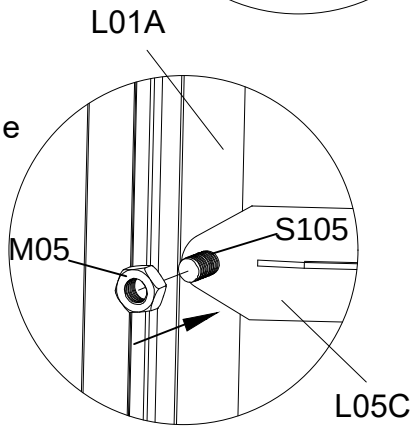

After installing L07C, fix L01A and L05C again

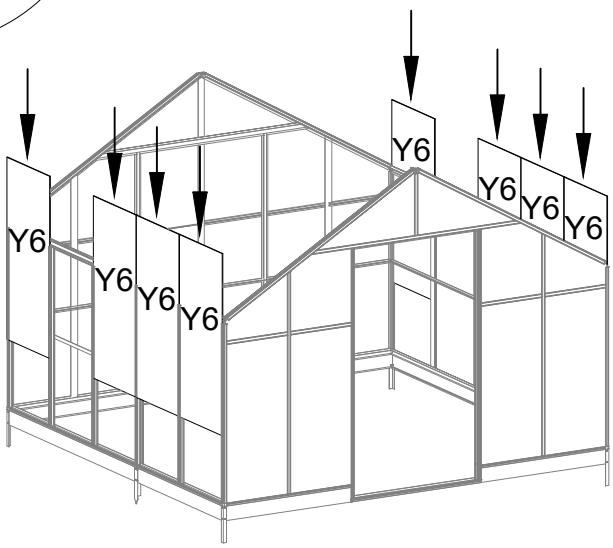

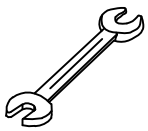

PART	NO	QTY
	L04B	2
	A03	2
	WINDOW2	2
	Y16	2
	S105 M5X10	12
	M05 M5	12

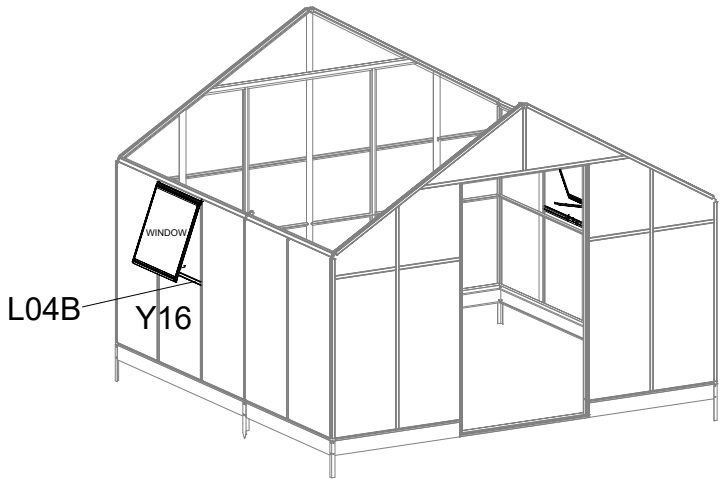

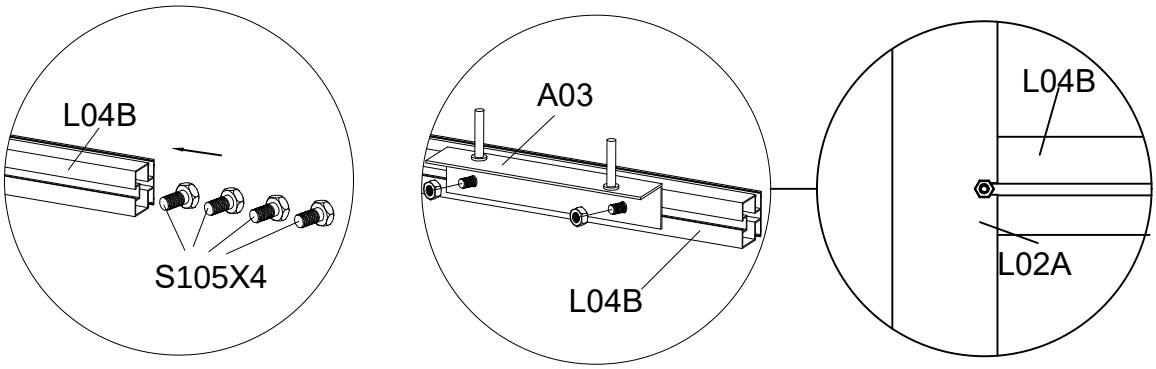

When installing L04B, the window needs to be lifted up to avoid the window not opening after the installation is complete

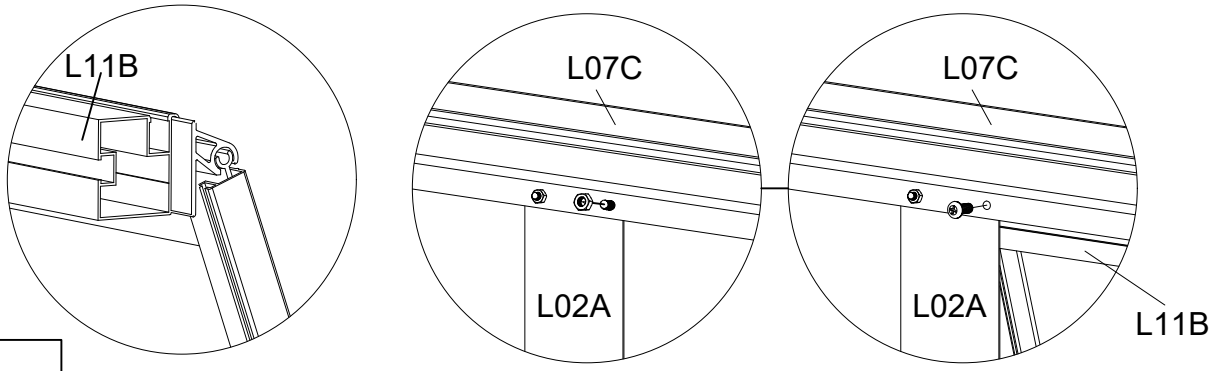

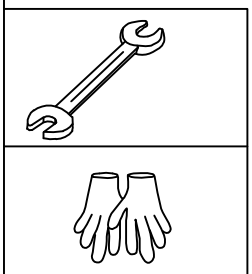

If the screws for the window installation position have already been installed firstIt needs to be removed first and replaced with S26

PART	NO	QTY
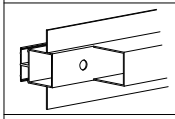	L10B	2
	A98 J171	1
	D329	6
	S26 M5X12	72

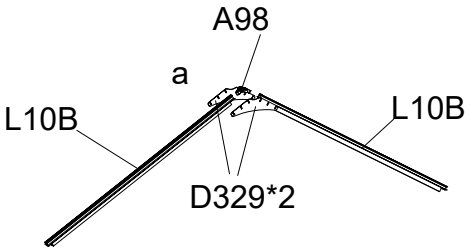

First, connect the two L10Bs with A98, and then fix the two L10Bs with D329 and S26 (installed on the ground first)

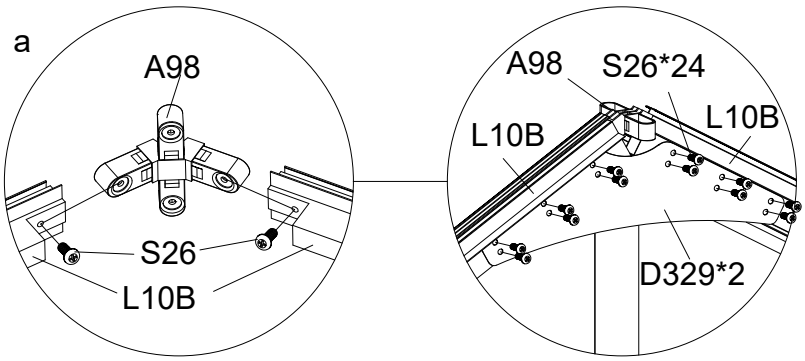

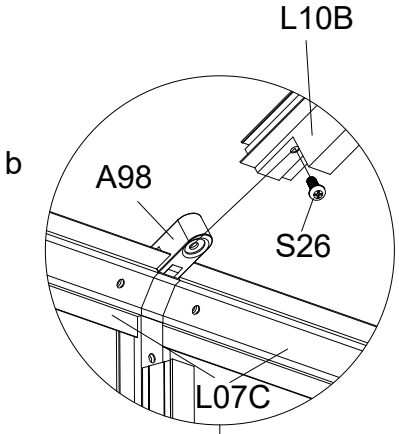

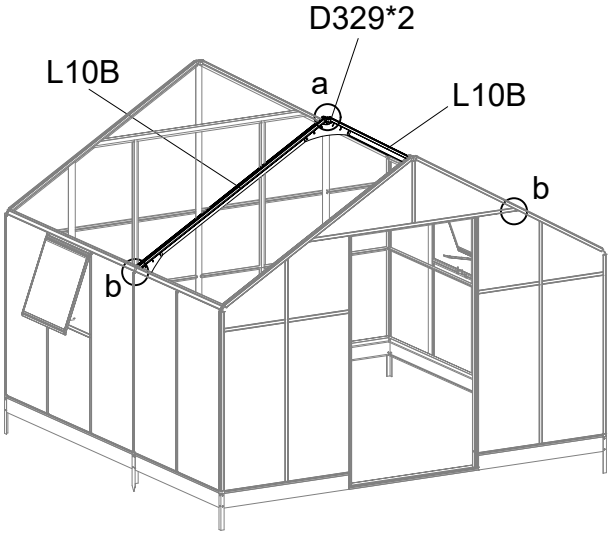

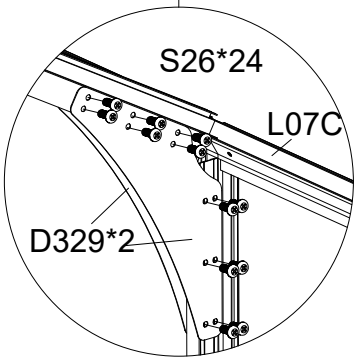

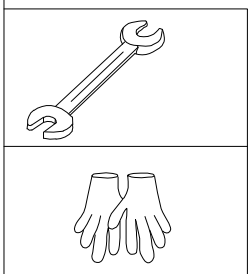

PART	NO	QTY
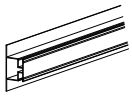	L02B	6
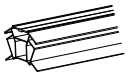	L06B	1
	L06C	1
	S105 / M5X10	24
	M05 / M5	24
	S26 / M5X12	4

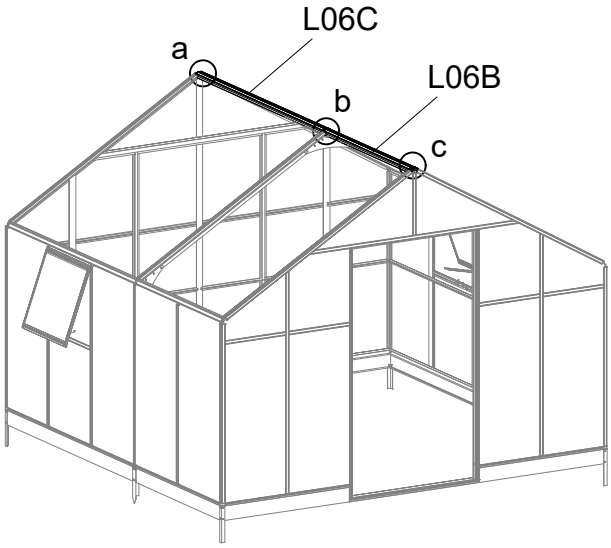

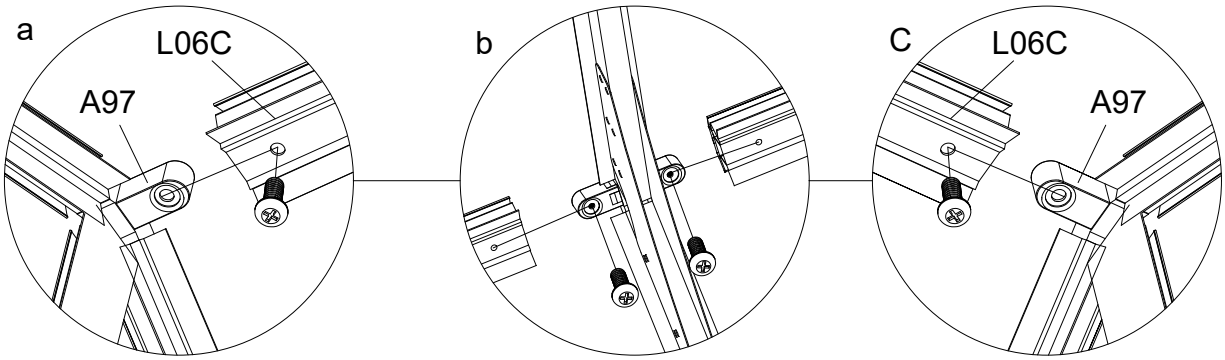

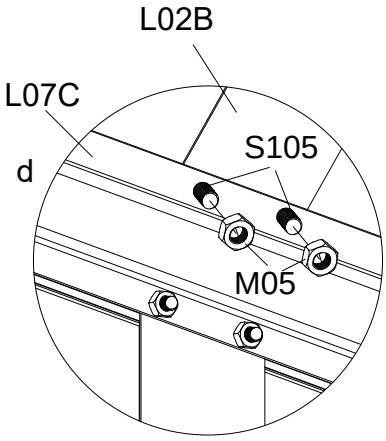

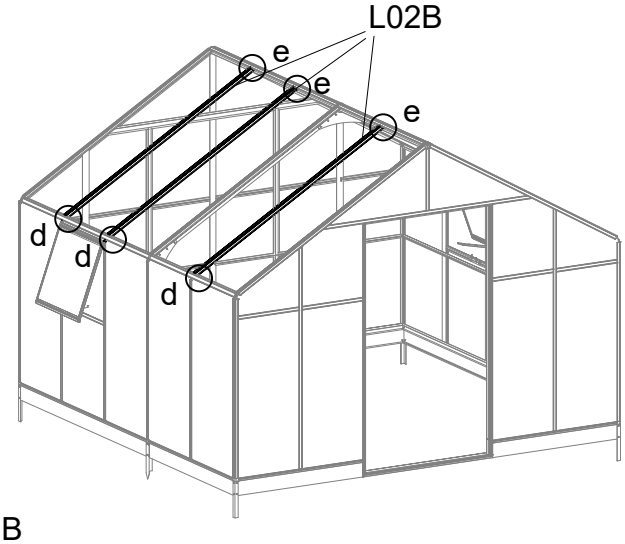

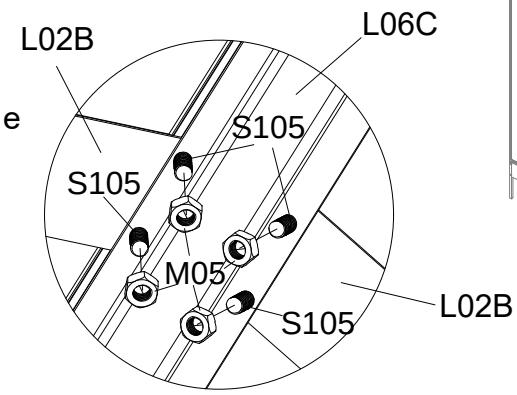

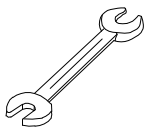

Fix glazing bars L02B (8pcs) to the eaves and the ridge profiles with S105 & M05

PART	NO	QTY
	L05B	2
	L05C	2
	D26	1
	S105 / M5X10	8
	M05 / M5	8
	Z08 / M4.2X16	2
	S26 / M5X12	12

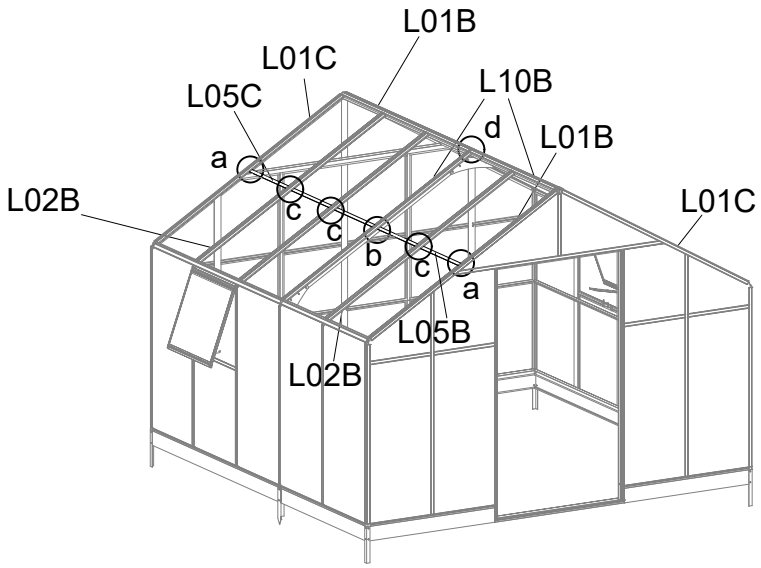

L05C with the extra reinforced edge in the middle should face inside.

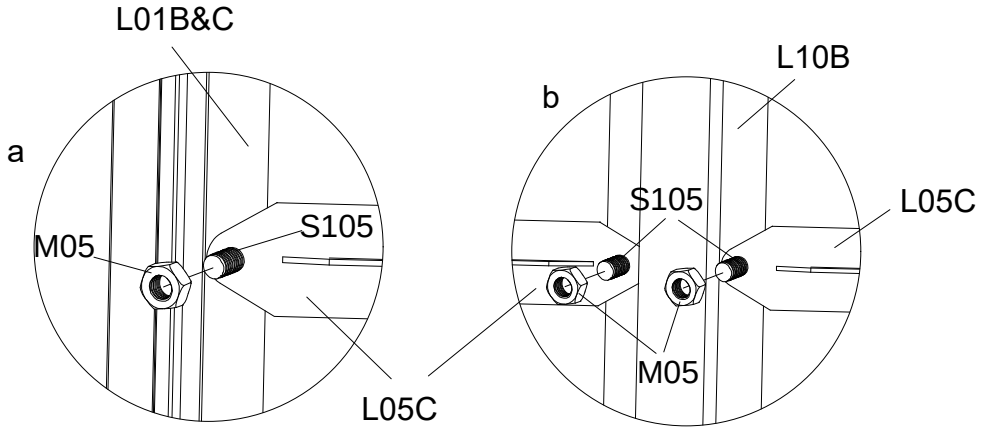

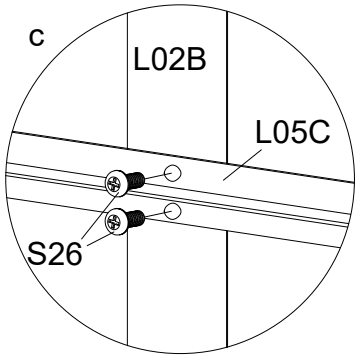

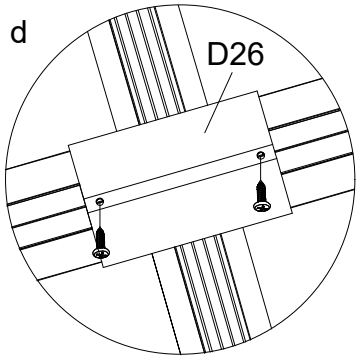

Fix D26 to L06C
from outside with
self-tapping screws Z08,
using a powered screwdriver.

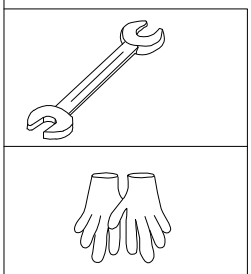

PART	NO	QTY
	L04B	8
	S105 M5X10	16
	M05 M5	16
	Y9	8

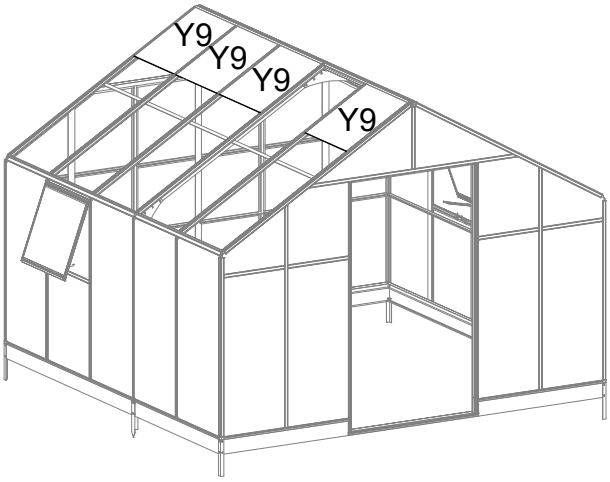

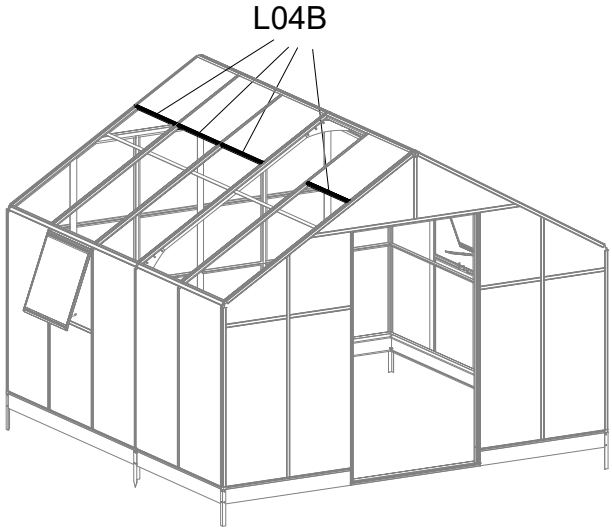

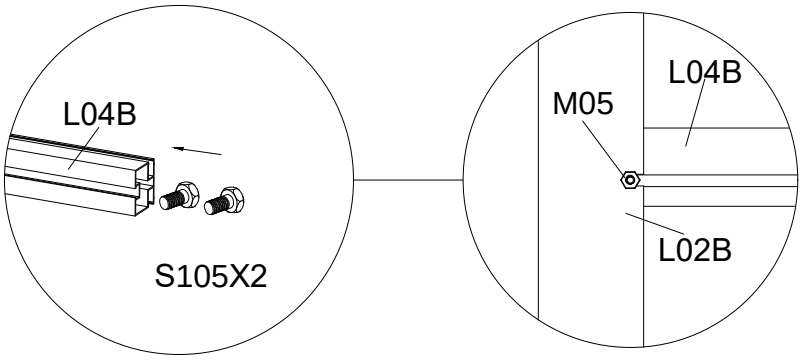

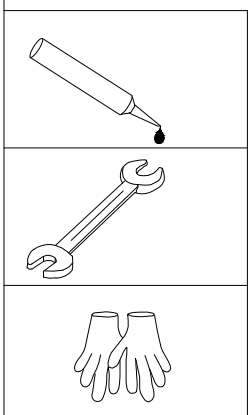

Top Assembly

PART	NO	QTY
	L04B	2
	A03	2
	WINDOW1	2
	Y9	2
	S105 M5X10	12
	M0 5 M5	12

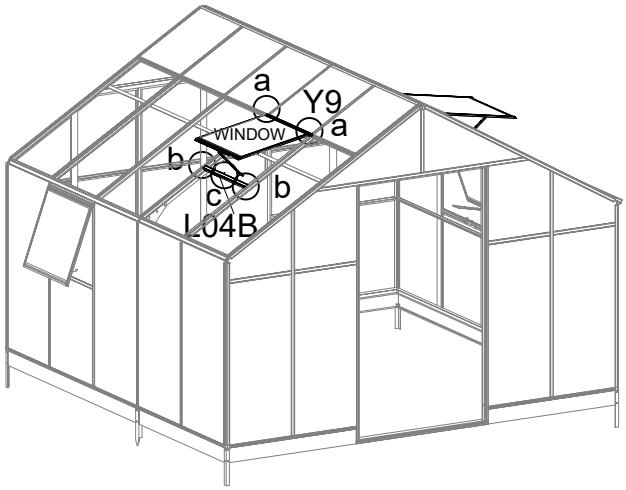

a

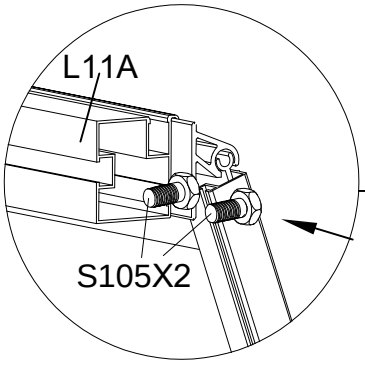

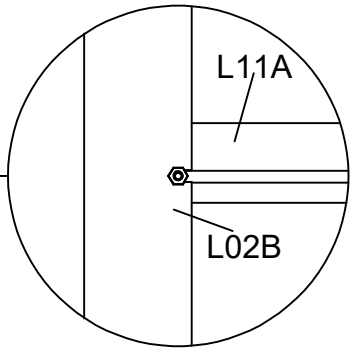

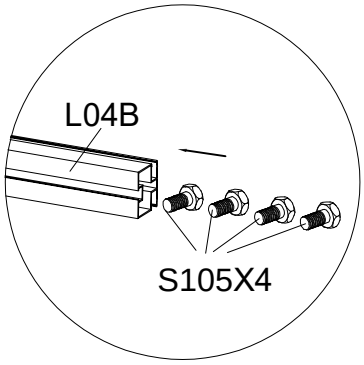

Slide 2 bolts (S105) into each L11A, and bolt it to L02B, using the S105 & M05.

b

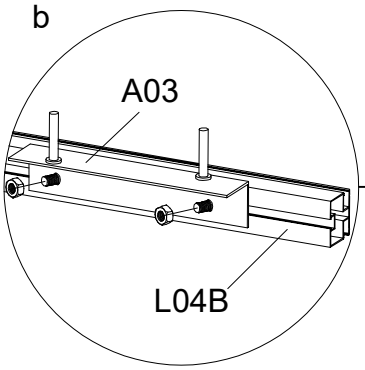

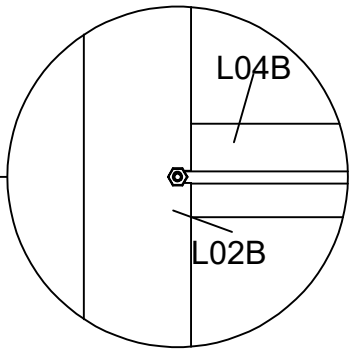

c

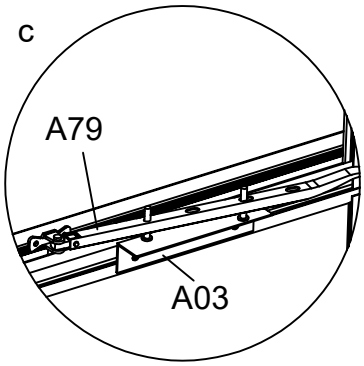

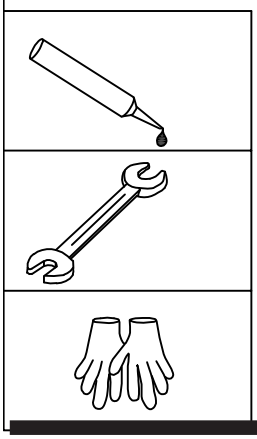

When installing L04B, the window needs to be lifted up to avoid the window not opening after the installation is complete

Before fixing A03, first close the window. Adjust the position of A03 according to A79 on the window,
so that the window can be securely closed, and then fix S05 and M03 on A03.

PART	NO	QTY
	L09B	2
	L09C	2
	D25	2
	S26 M5X12	16
	S05 M6X12	4
	M03 M6	4
	Y7	8
	Y9	2

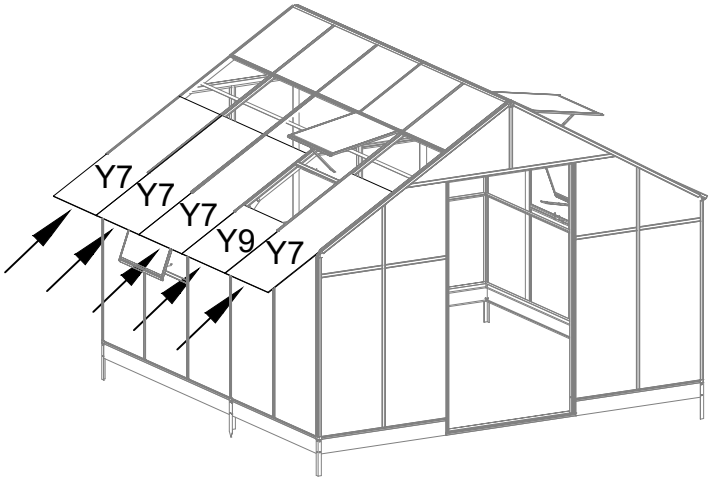

After the panels and windows are in position,
put some silicone sealant around to avoid leaking water.

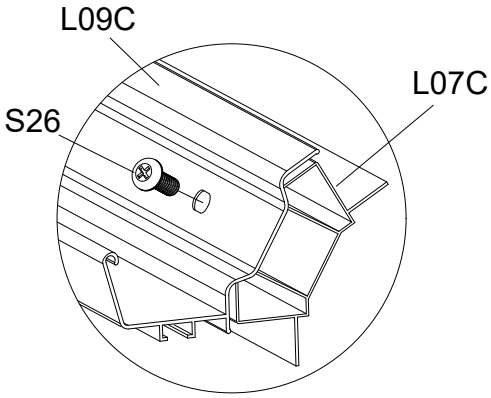

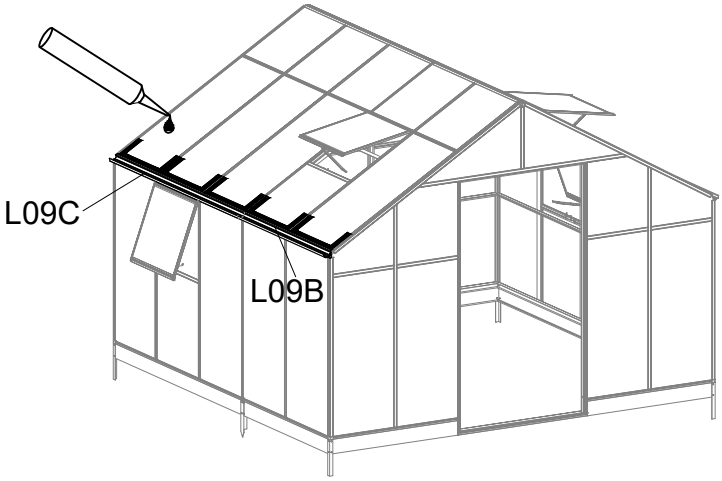

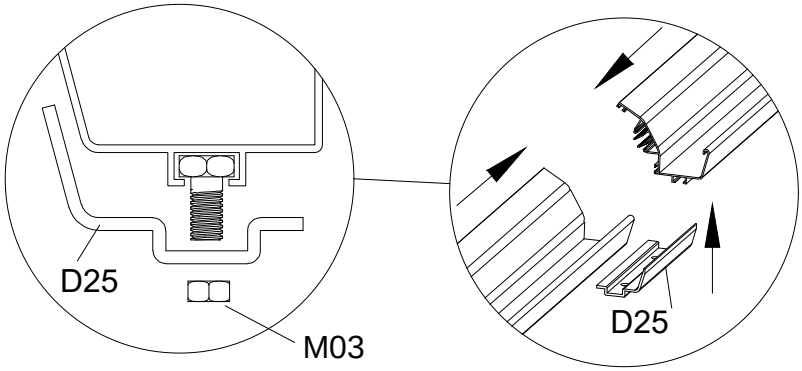

Slide 1*S05 into the bolt channel of both L09,
fix D25 to L09 using S05 & M03

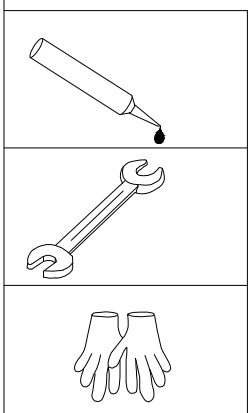

PART	NO	QTY
	D00R-L	1
	D00R-R	1
	A51	4
	Z17 M4.8X16	8
	S27 M5X12	24

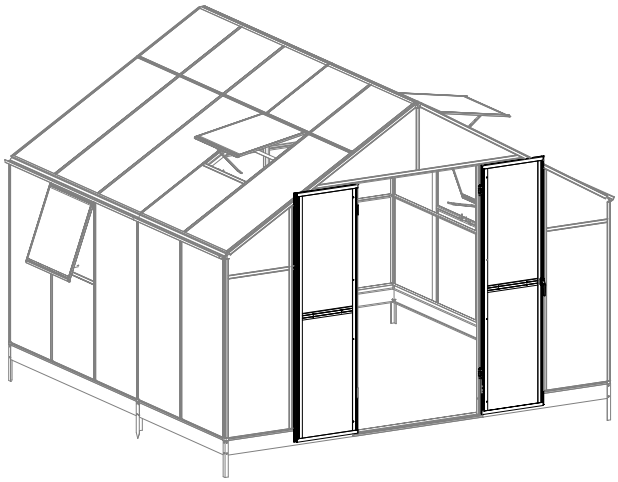

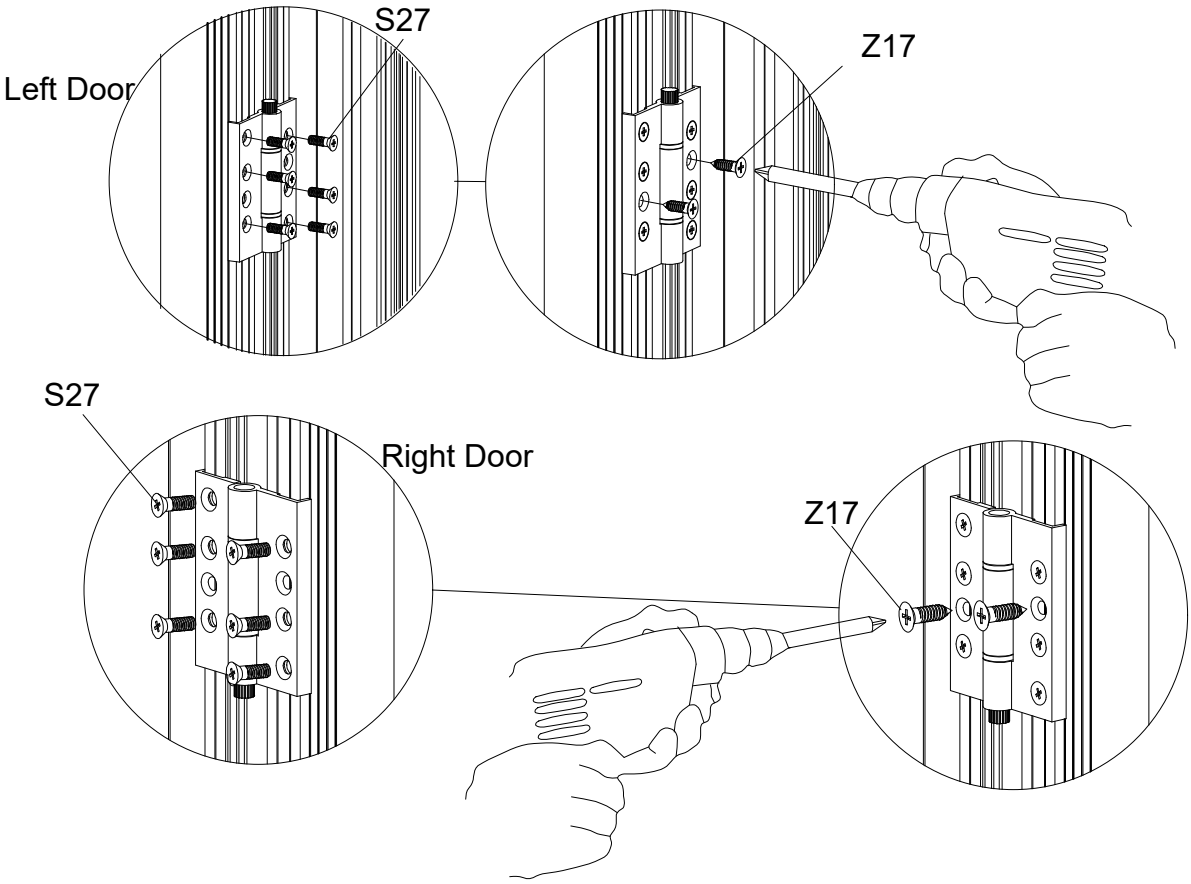

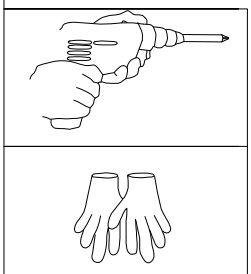

Fix A51(4 PCS) one side on the door profile and the other side to L02E/L02F using S27. Then secure with Z17.

PART	NO	QTY
	J172R	2
	J172L	2
	J173	2
	J94	4
	L25	4
	J93	4
	J166	4
	Z08 M4.2X16	4
	Z02 Ø4X16D	10

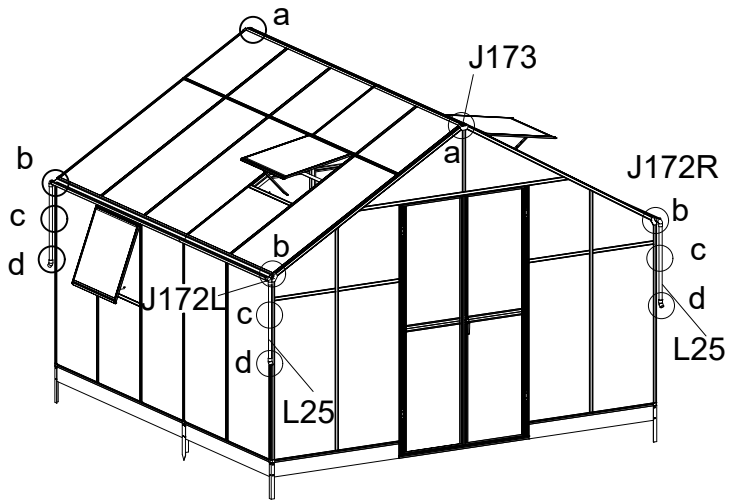

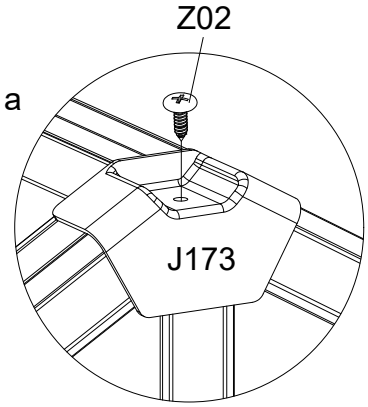

Fix the cover caps J173 into the ridge profile

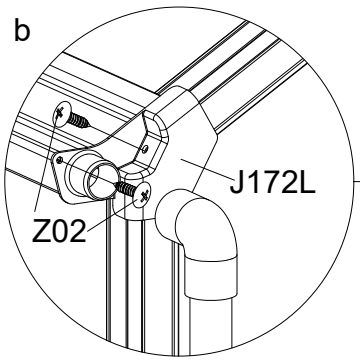

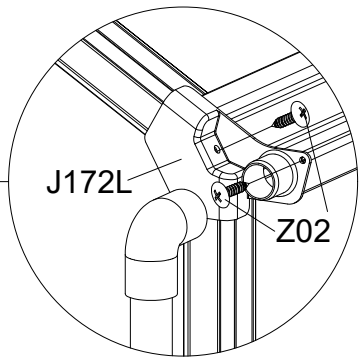

Fix the cover caps (J172L/R) carefully with Z02. Be careful to ensure that the screws are driven in straight and in the correct position (see detail drawings).

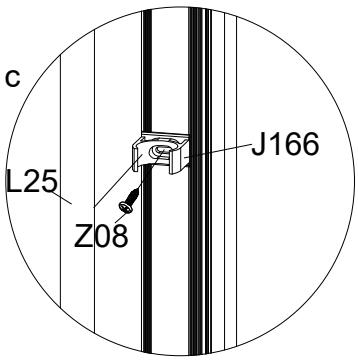

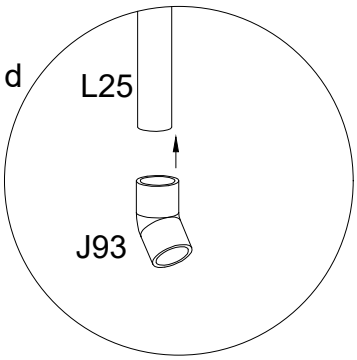

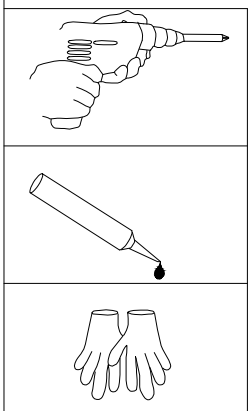

Drill a hole in L01A/L01B, approximately 3mm diameter and 400mm down from the gutter. Fix the J166 downpipe bracket with Z08 screws and then clipthe L25 downpipe into the J166 bracket.

If you wish to eliminate leaks, use glue when fixing the downpipe bends (not provided).

PART	NO	QTY
	J107	1

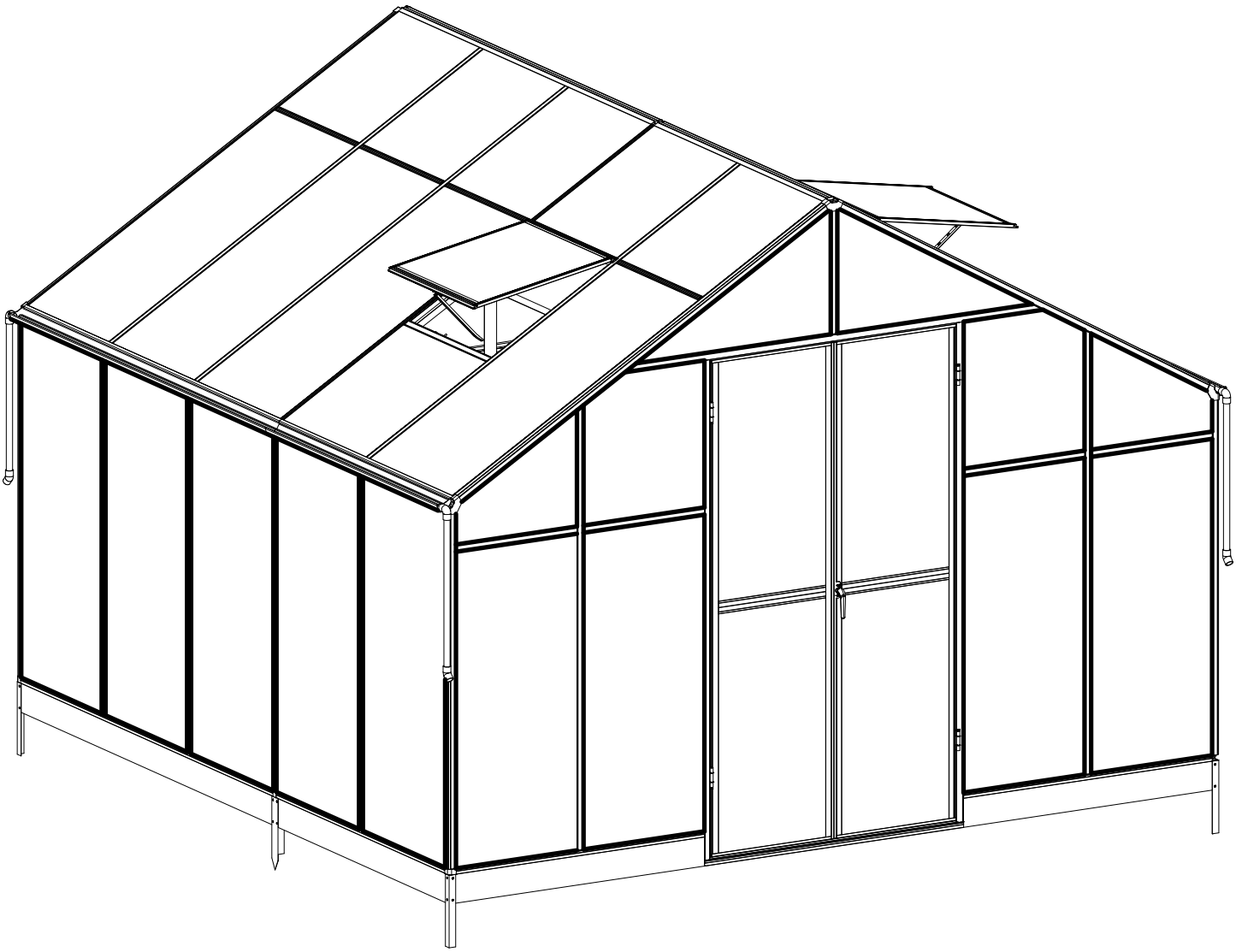

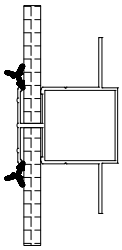

Rubber strips need to be installed around the glass.

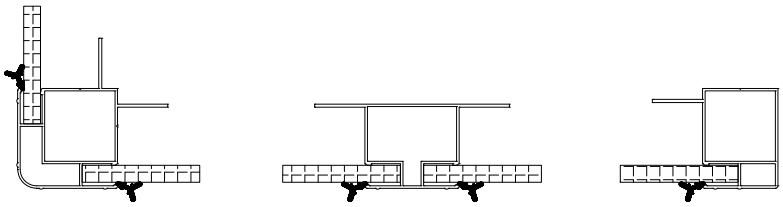

WARRANTY INFORMATION: Please refer to our website for detailed warranty conditions and coverage.
For the most up-to-date and comprehensive warranty information, visit **www.tmgindustrial.com**