TMG INDUSTRIAL

TMG-AFF40
PRODUCT MANUAL
v.2026.11.06

40" (1 m) ATV/UTV Front-Mount Flail Mower

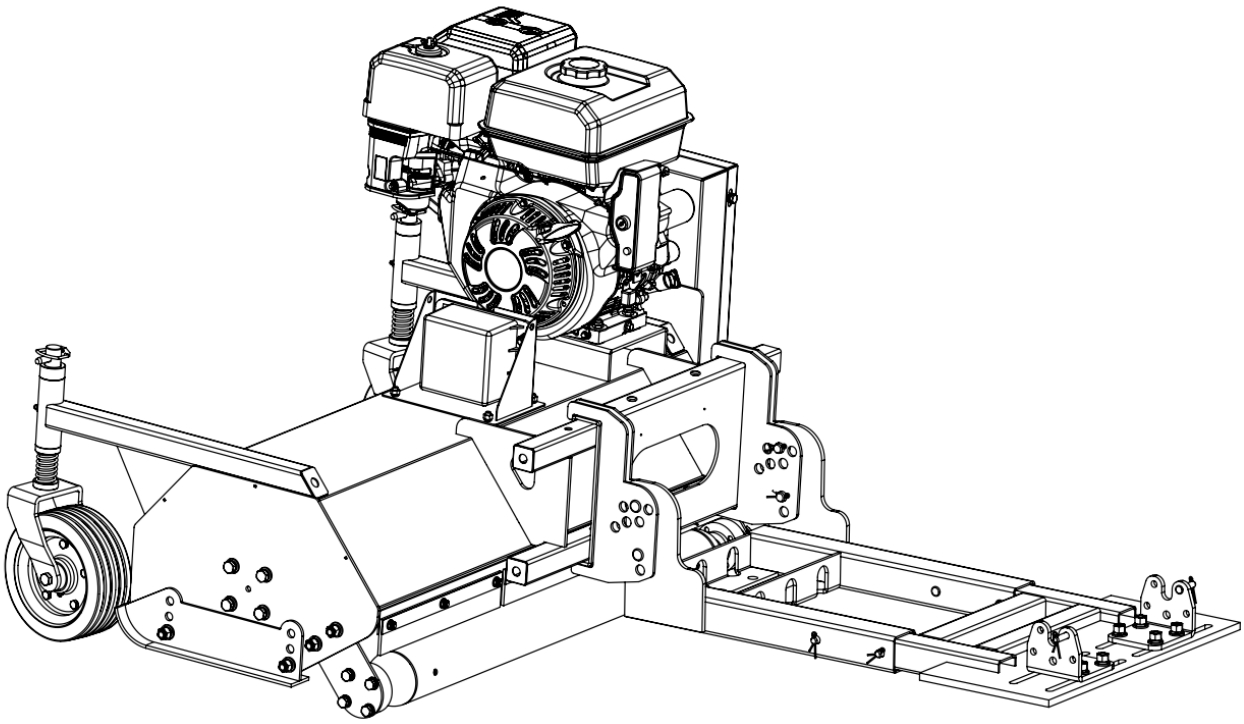

⚠ WARNING



Please read and understand the product manual completely before assembly
- Check the parts list to make sure all parts are received.
- Wear safety goggles or other protective gear while assembling.
- Do not return products to dealers, who are not equipped to handle returns.

Missing parts or questions about assembly?
Email: cs@tmgindustrial.com
Or visit: tmgindustrial.com

Table of Contents

1. Introduction 2

2. Safety and Information Symbols 2

3. Main parts of the machine 4

4. Recommendations for motor use 5

5. Packing parts list 7

6. Assembly Steps 8

7. Assembly and Mounting 11

8. Maintenance and upkeep 13

9. Specification sheet 14

10. Exploded View and Parts List 15

1. Introduction

Dear Customer,

Thank you for choosing a TMG Industrial product.

The user must read and understand this manual in its entirety and is required to follow the instructions contained therein scrupulously before proceeding with the assembly, use, maintenance and cleaning of the machine.

This user and maintenance manual forms an integral part of the machine and must be retained for its entire service life. Should the machine be transferred to a third party, it must be handed over to the new user.

Because we continually improve our products, the machine you received may differ in some details from the descriptions and illustrations in this manual. The manufacturer reserves the right to make changes without prior notice.

2. Safety and Information Symbols

Pictogram symbols are affixed to the machine to convey key product information and operating instructions.

DANGER

Indicates a dangerous situation which, if not avoided, will result in death or serious injury.

WARNING

Indicates a hazardous situation which, if not avoided, could result in death or serious injury.



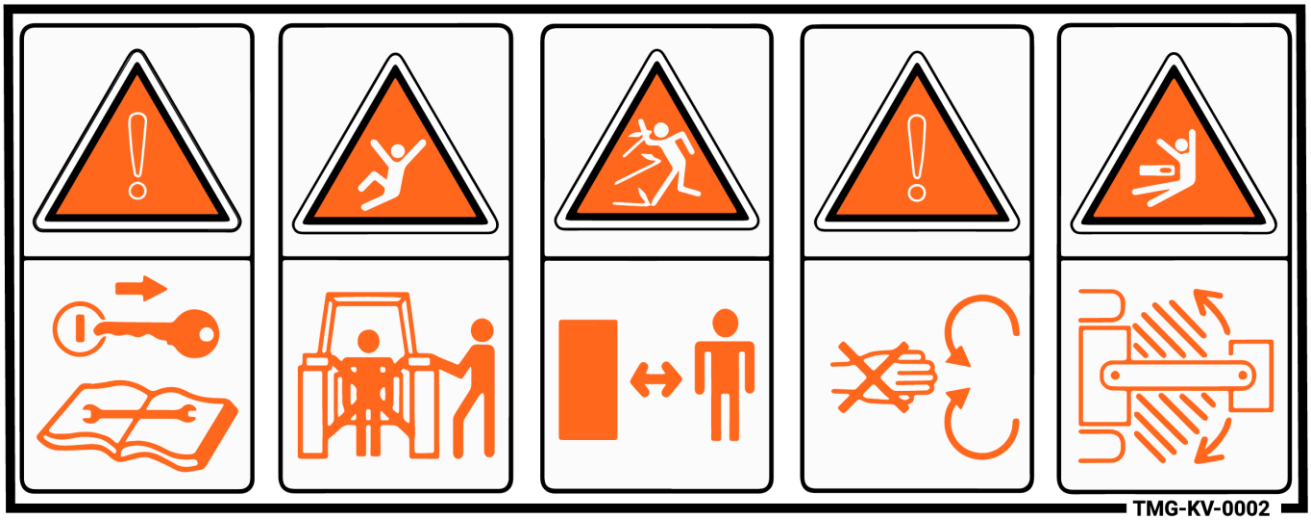

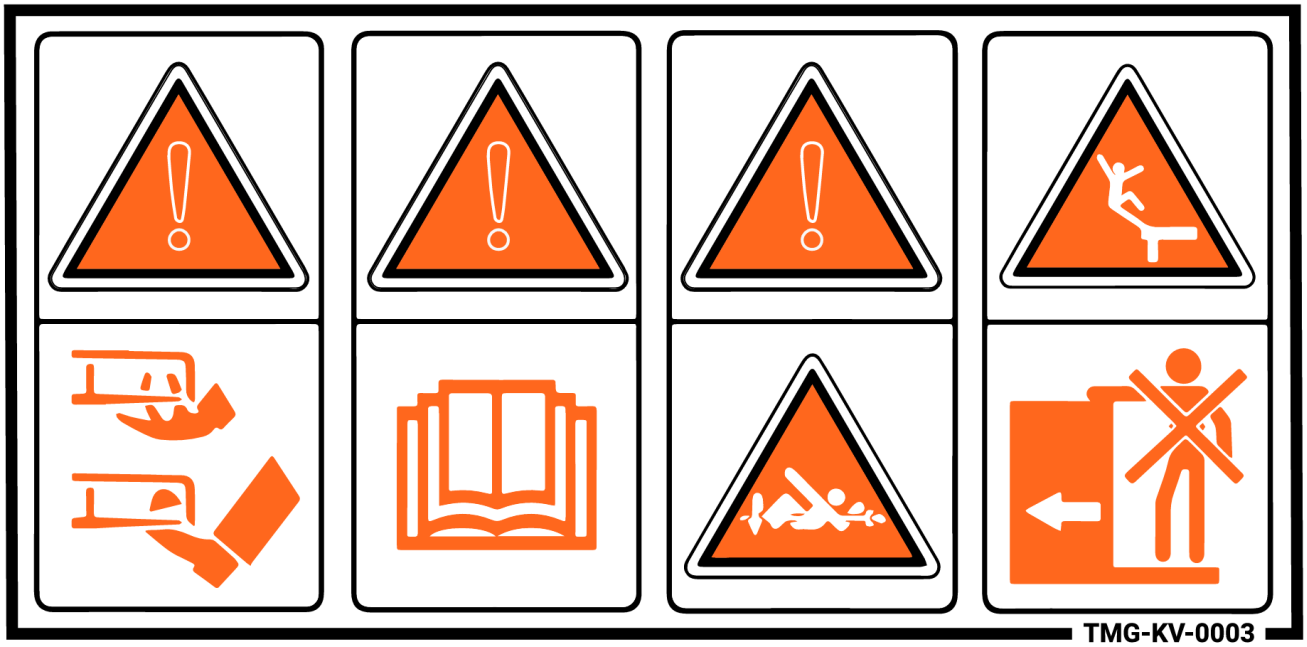
TMG-KV-0003

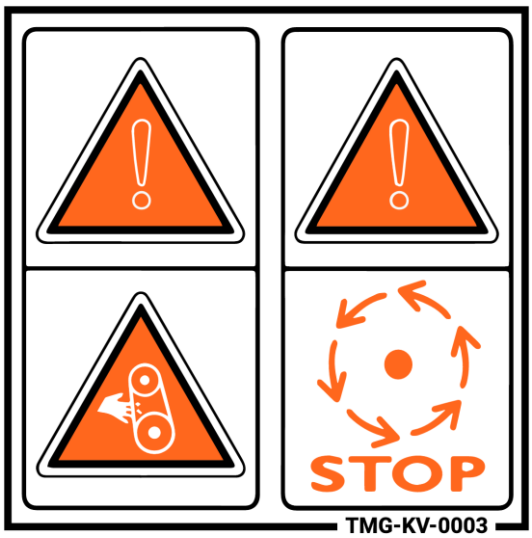
STOP
TMG-KV-0003

3. Main parts of the machine

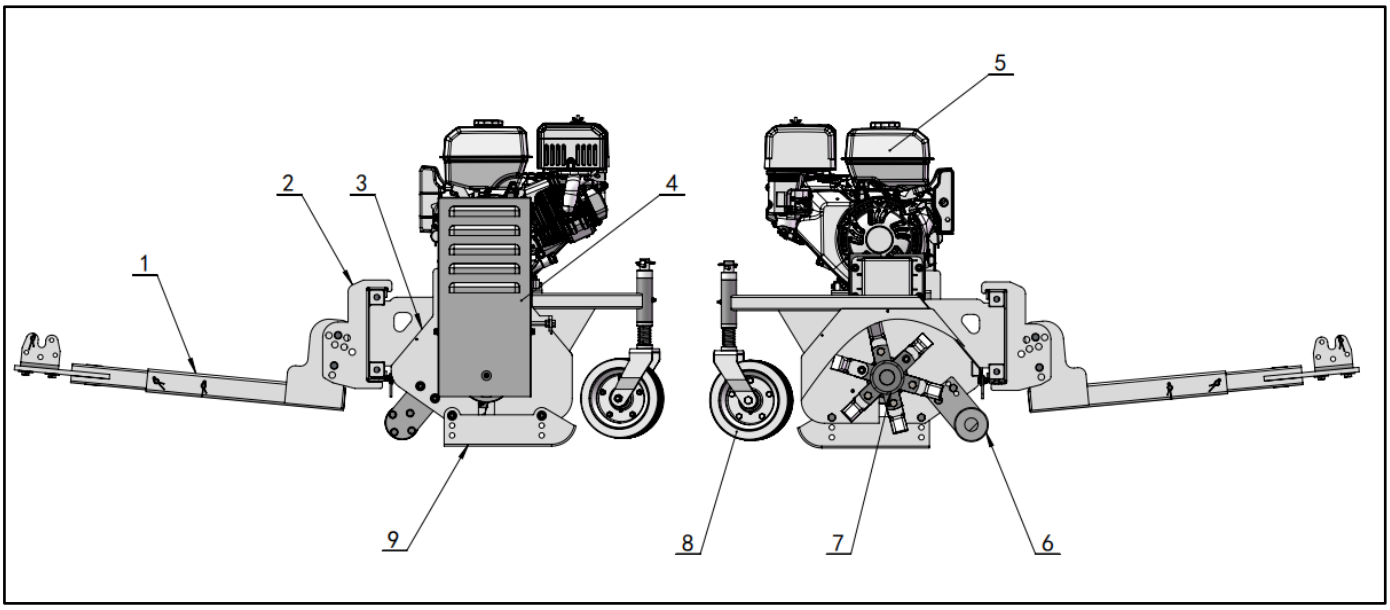

1	Engine
2	Rear drum
3	Blade shaft
4	Front wheel
5	Slidingshoes
6	Mounting bar
7	Mounting frame
8	Flail mower main body
9	Belt cover

4. Engine Care and Fuel

IMPORTANT : The recommendations below are general guidelines for the correct use and maintenance of gasoline engines. Before using the unit, you must also read and understand any engine manual supplied with the unit.

Failure to follow these instructions may result in malfunctions, serious damage to the engine and dangerous situations for the operator.

4.1 Engine oil

The engine is supplied without lubricating oil.

However, following factory testing, small residual quantities of oil may be present inside it.

Before starting the engine for the first time, it is essential to fill the engine with the specified oil.

Before each use, check the engine oil level while the engine is cold, with the engine positioned horizontally on a flat surface.

The level must be between the MIN and MAX marks on the dipstick. If necessary, top up the oil, taking care not to exceed the maximum level.

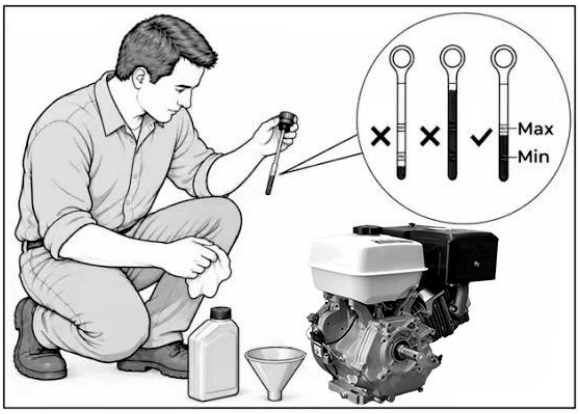

Do not operate the engine with insufficient engine oil, oil that has deteriorated, or oil that does not meet the specifications. Inadequate lubrication causes internal friction, leading to overheating and seizure of components.

For the type and quantity of engine oil, checking procedures and change intervals, refer to the engine's user and maintenance manual.

4.2 Cleaning and maintenance of the air filter

Check the air filter regularly, cleaning or replacing it as specified in the engine manual. In dusty environments, increase the frequency of these checks.

Do not operate the engine without a filter, or with a blocked or damaged filter. The ingress of contaminants causes premature wear of the cylinder-piston assembly and the valves, whilst a blocked filter restricts the air flow, compromising the fuel mixture and engine performance.

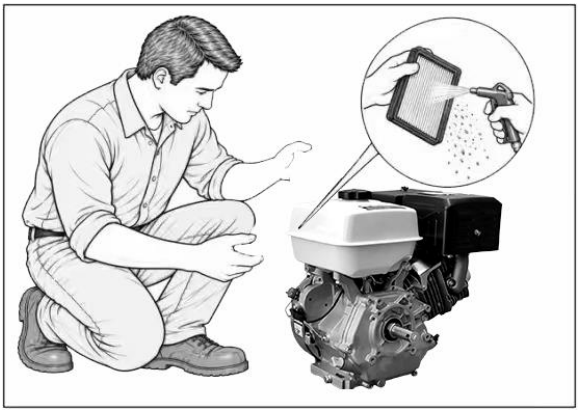

4.3 Routine maintenance

Perform routine maintenance at the intervals specified in this manual and in the engine manual. Inadequate or irregular maintenance compromises performance,accelerates component wear and causes malfunctions.

Carry out only the specified maintenance tasks and only those for which you have the necessary expertise. Improper or unauthorized maintenance compromises safety, operation, and the service life of components.

4.4 Choice and storage of fuel

Use only fresh, clean petrol that has not been mixed with oil. Store fuel in approved, clean and undamaged tanks, protected from damp, sunlight and sources of heat. Check that any metal containers are free from corrosion. Ideally, use the petrol within 30–60 days of purchase.

For longer storage periods, consider using a specific fuel stabilizer, following the manufacturer's instructions.

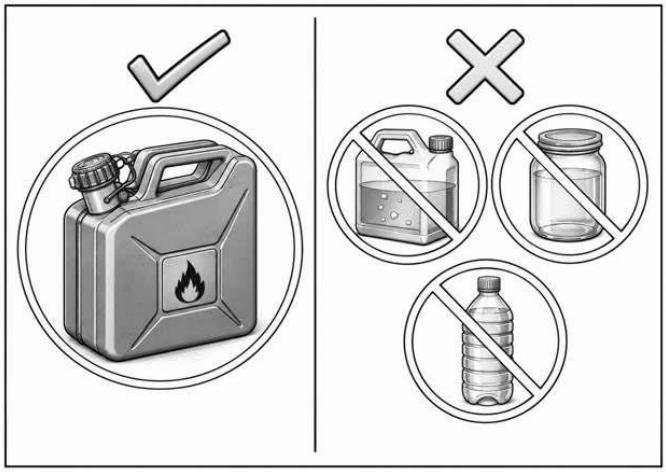

The use of deteriorated or contaminated fuel causes deposits in the carburetor, erratic running, loss of performance and starting difficulties, and may even prevent the engine from starting.

5. Packing parts list

After opening the box, check the following:

- All supporting components are present
- No damage caused by shipping

Report any missing or damaged parts to the dealer or manufacturer immediately after opening the crate. Claims received after the delivery receipt is signed will not be accepted.

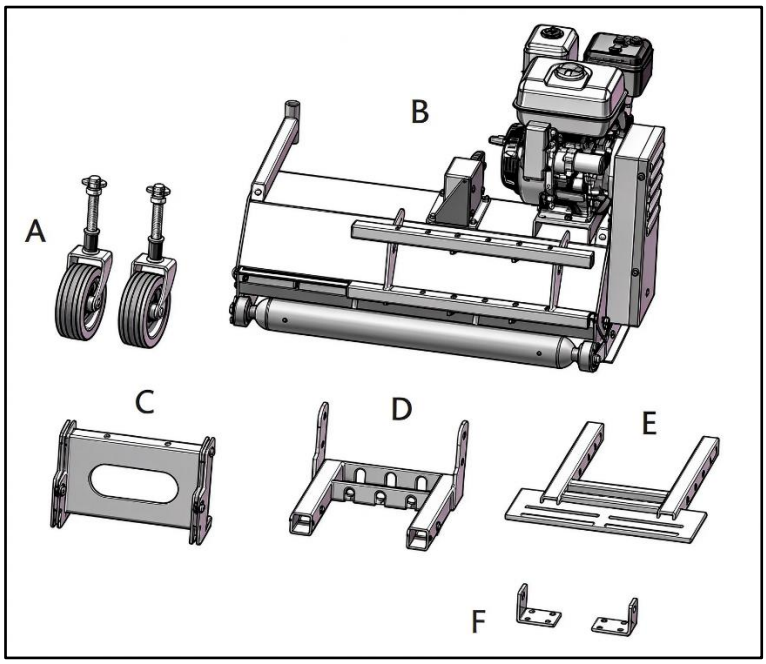

A	Roller assembly
B	Flail mower main body
C	Hanger bracket
D	Subframe
E	ATV mounting frame
F	Mounting plate

6. Assembly Steps

1. Place the hanger on the square tube bracket of the main body;
2. Align the holes of the hanger with the holes on the square tube;

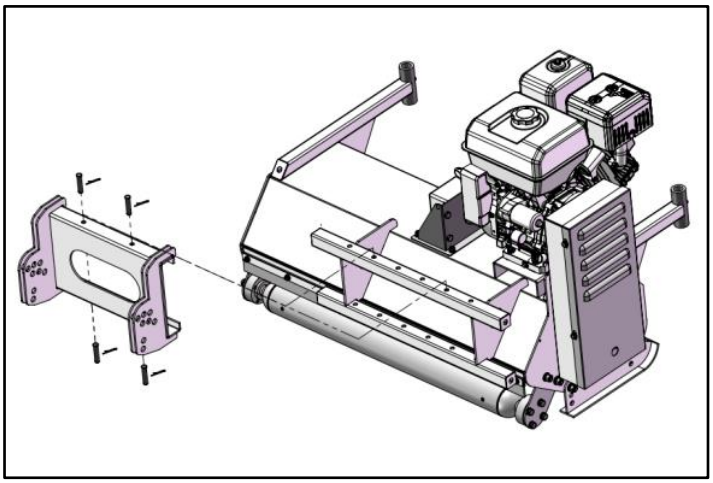

3. Place the sub frame between the two plates of the hanger;
4. Align one side of the hole and insert the hairpin cotter (R-clip) and cotter pin;

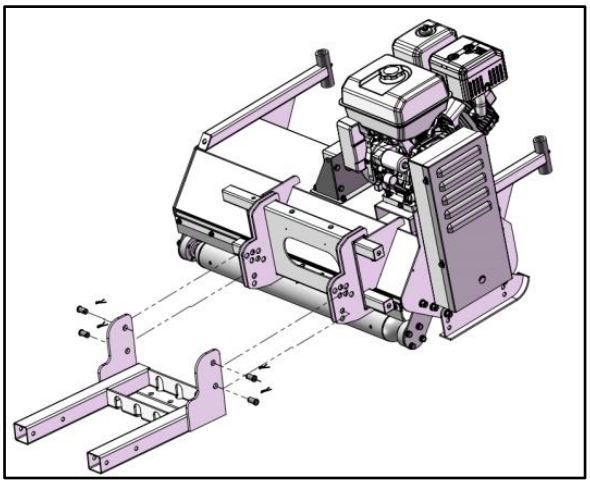

5. Insert the frame into the square tube of the sub frame;
6. Align the frame and sub frame holes;
7. Insert the hairpin cotter (R-clip) and cotter pin;

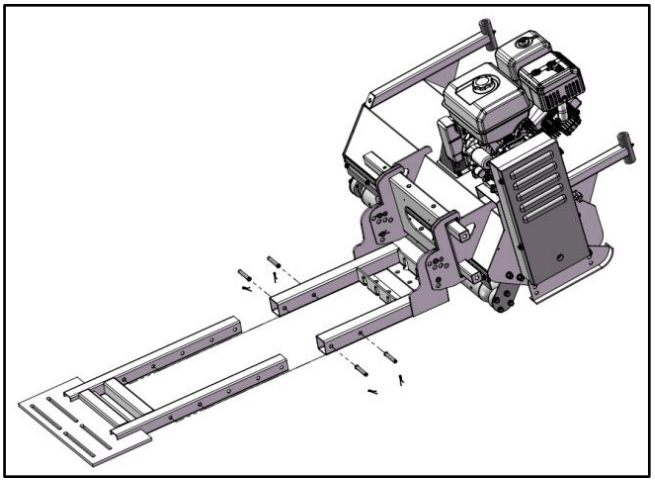

8. Place the hanging board on the frame;

9. Align the holes of the hanging board with the long holes of the frame;

10. Insert the bolt, then tighten it;

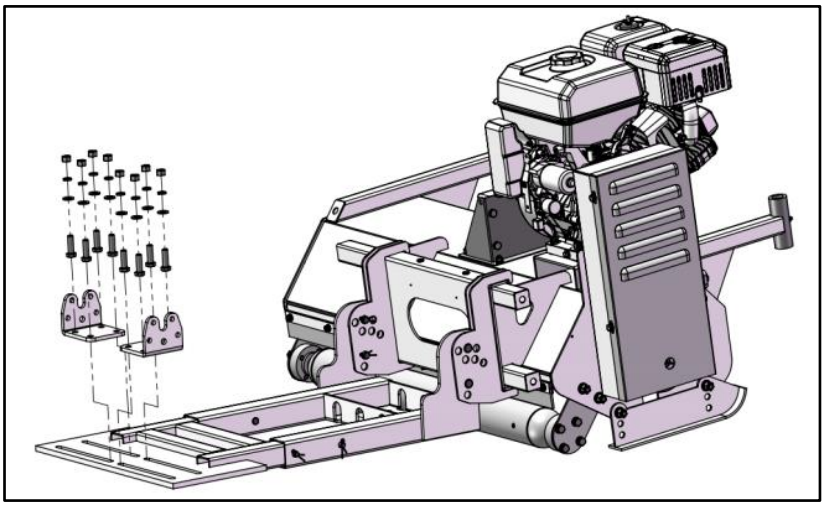

11. Insert the roller into the main casing;

12. Insert the liner from above;

13. Insert the locking pin to fix the roller;

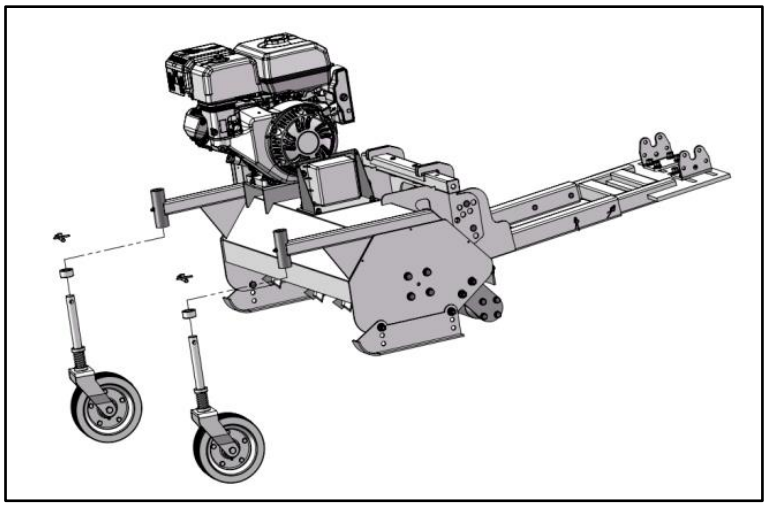

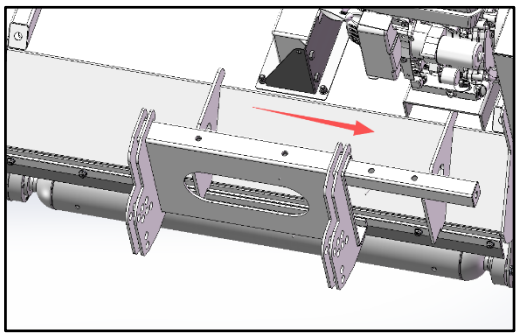

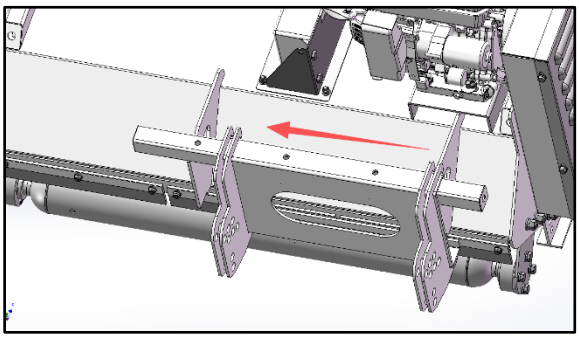

NOTE: The subframe can slide on the square tube so the mower follows ground contours more closely.

Connecting and disconnecting

1. Identify the terminals using the (+) and (−) markings.
2. First connect the red cable to the positive terminal (+), then the black cable to the negative terminal (−).
3. Tighten the terminals and check that the cables are clear of hot, moving or sharp parts.

   To disconnect the battery, follow the reverse order: negative first, then positive.

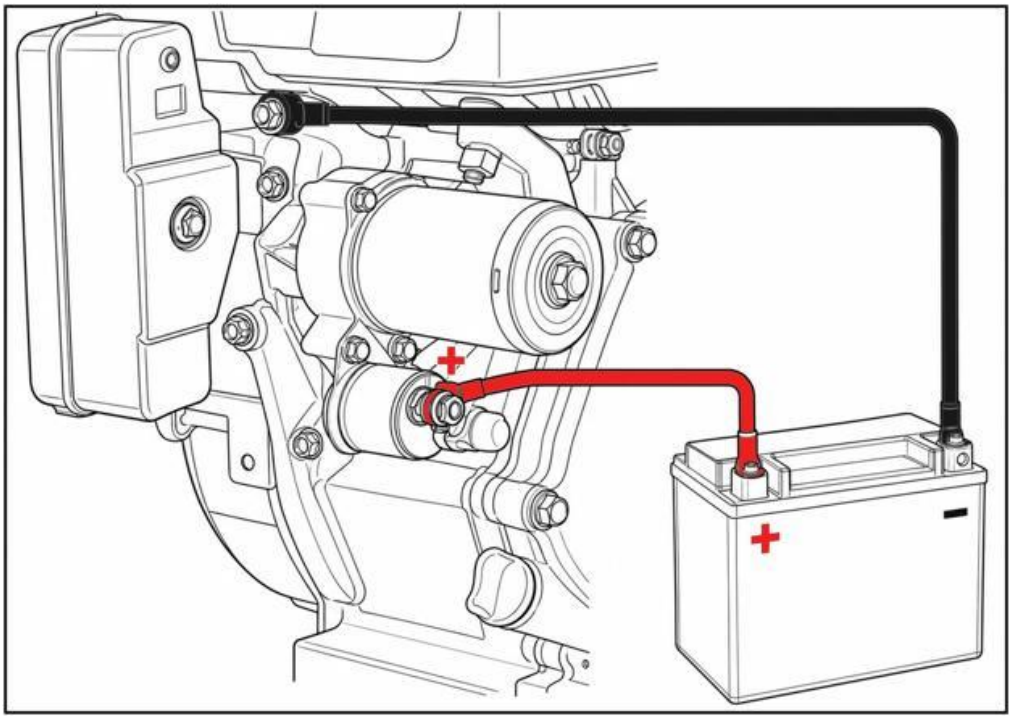

7. Assembly and Mounting

7.1 Initial engine oil fill

CAUTION: The engine is shipped without oil, but residual test oil may be present. Do not start the engine before filling it with oil.

1. Ensure that the unit is on a level surface and that the engine is cold;
2. Remove the filler cap and pour in the oil gradually;
3. Fill to the maximum level (H/MAX), as indicated on the dipstick;
4. Insert the dipstick into the filler neck without threading it in, remove it, and check the level;
5. Once the correct level has been reached, screw the cap/pole in fully.

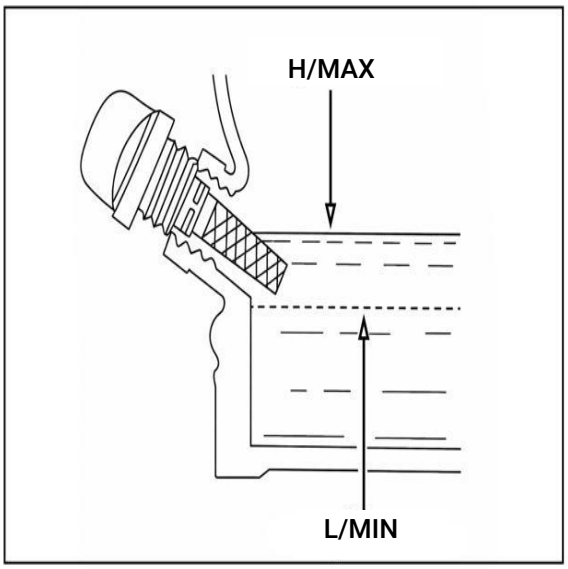

7.2 Checks before use

Carry out checks with the engine switched off, the key removed and all moving parts completely at a standstill.

1. The cutting components show no visible damage, and all scheduled maintenance has been completed;
2. The oil level is correct and the air filter is clean and undamaged;
3. There are no oil or fuel leaks;
4. The battery, cables and terminals are intact and securely fastened.

7.3 Clutch Operation

The centrifugal clutch allows the rotor to start up gradually and may slip under overload or clogging, helping to protect the engine and the transmission.

At idle, approximately 1000–1200 rpm, the clutch is disengaged. As the engine speed increases, the clutch transmits motion to the belts and the rotor. At full speed, the specified rotor speed is 2000 ± 200 rpm.

CAUTION: Do not operate at medium-to-low revs. Incomplete engagement of the clutch may cause slippage, overheating and premature wear of the clutch and belts.

7.4 Operating Procedure

1. Install the lawn mower onto the ATV or UTV;
2. Start the engine and gradually push the throttle to the maximum rated speed;
3. Wait for the blade shaft to reach the rated speed and run smoothly;
4. Drive the ATV or UTV at a constant speed to begin mowing;
5. Shut off the engine when the work is finished;
6. Clean grass clippings and debris off the machine after the engine has cooled.

CAUTION: Do not use gasoline that is older than 30–60 days, or gasoline that is contaminated or mixed with oil. Avoid allowing dirt or water to enter the fuel tank. If the fuel is discolored, contaminated, or has an unusual odor, drain the tank and refill with fresh fuel before use.

1. Place the unit outdoors on a flat, solid surface;
2. Unscrew the fuel cap and fill with unleaded petrol that meets the engine's specifications
3. Do not exceed the maximum level.

   Leave space for the fuel to expand inside the tank.
4. Screw the cap back and wipe up any spilled fuel before starting the engine.

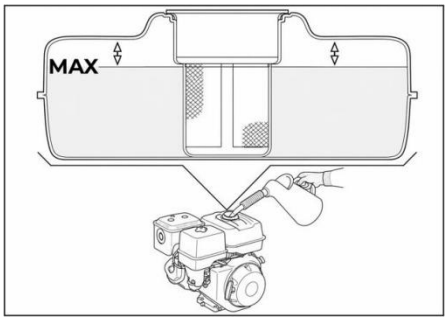

7.5 Starting the engine

Place the unit on a flat, firm surface. Do not start the engine whilst the unit is tilted or upside down.

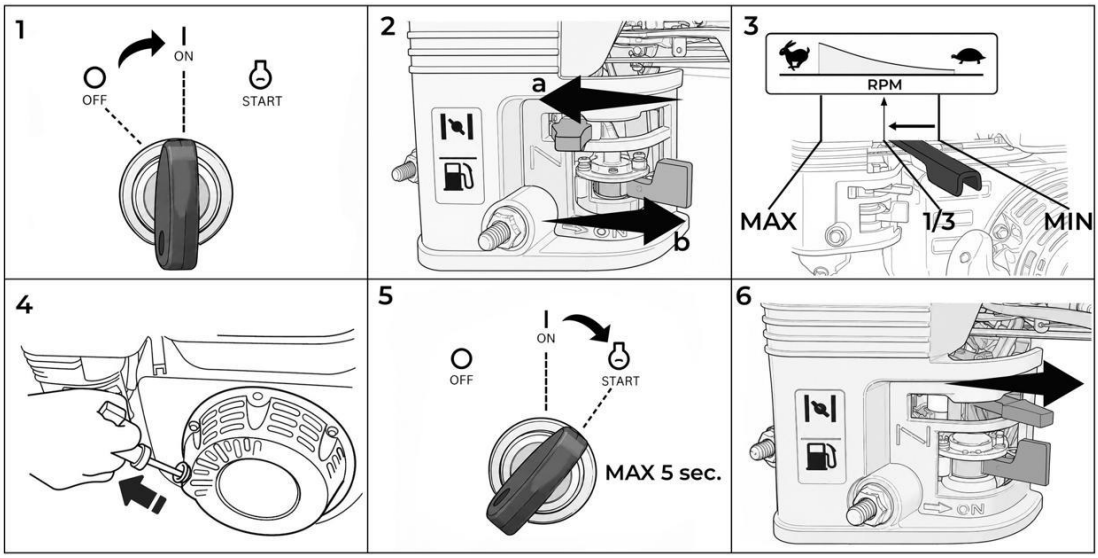

1. Turn the ignition key to 'ON' (1).
2. When the engine is cold, set the choke lever to the 'closed' position (2a).
3. Open the fuel tap by moving the relevant lever to "ON" (2b).
4. Set the throttle lever to approximately 1/3 of its travel (3).
5. MANUAL STARTING (4): Slowly pull the starter handle until you feel resistance, then pull firmly. Guide the handle as it winds back
6. ELECTRIC START (5): Turn and hold the key in the START position until the engine starts.

   IMPORTANT： ELECTRIC START: Do not run the starter motor for more than 5 seconds. After this time, release the key and wait 5 seconds before attempting to start the engine again.
7. Once the engine has started, return the choke lever to the 'open' position (6).
8. Allow the engine to warm up at idle for a few minutes and check that it is running smoothly.

8. Maintenance and upkeep

The AFF40 front-mount flail mower requires scheduled maintenance to operate safely and reliably over the long term.

Maintenance object	Activity	Type	Maintenance interval
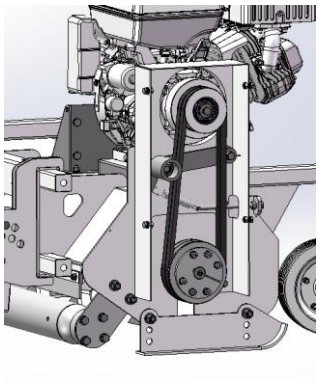	Apply 1–2 strokes of a grease gun to the drum end bearings. Check that the bearing fasteners are tight. If a fastener is loose, apply thread-locking compound and re-torque it to the specified value. Tighten the fastening screws of the bearing. Check the bolted joints of the engine, the transmission and other parts. Check the condition of the belt and replace the worn belt	Bearing grease: NLGI No. 2, service temperature −30 °C to +60 °C (−22 °F to +140 °F)	2 hours after the first start, and after that 20 hour or one season.
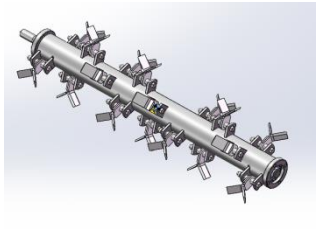	Check the condition and fastening of the blades. The blades should easily rotate around the pin. The blades have two wearing surfaces. Sharpen the blades, if they are worn. Check the condition, the bearings and the fastening of the blades.		10 hours.
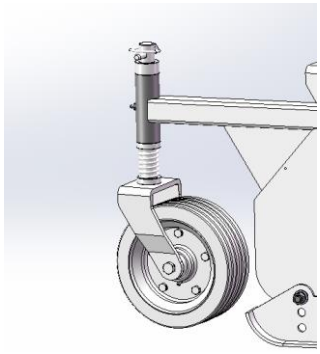	Check the condition of the cotter of the front wheel. Grease the shaft. Check the fastening of the skids. Check the condition of the rubber protector. Replace if necessary. Check the bearings of the front wheel, and the condition of the shaft screw and sleeve.		10 hours.
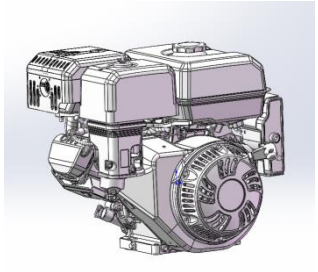	Replace engine oil after the first 5 operating hours. Clean the air filter. Replace engine oil always after every season. Check the fastening of the parts. Tighten any loose screws. See the engine manual of the engine manufacturer for more detailed maintenance instructions.		

9. Specification sheet

Model	AFF40
Engine	Rato 10 HP gasoline engine
Starting Mode	Recoil Start
Drive system	2 belts and centrifugal clutch
Clutch	Centrifugal Clutch
Working Width	39.4" (1000mm)
Working efficiency	1800-2100 m²/h
Rotor Shaft Diameter	3..5" (90mm)
Adjustable mowing height	0.8-2.8" (20-70mm)
Flails	Shovel: 20pcs; Y-Type Blades: 40pcs; Heavy hammer: 20pcs.
Cutter wheel RPM	2000 rpm

10. Exploded View and Parts List

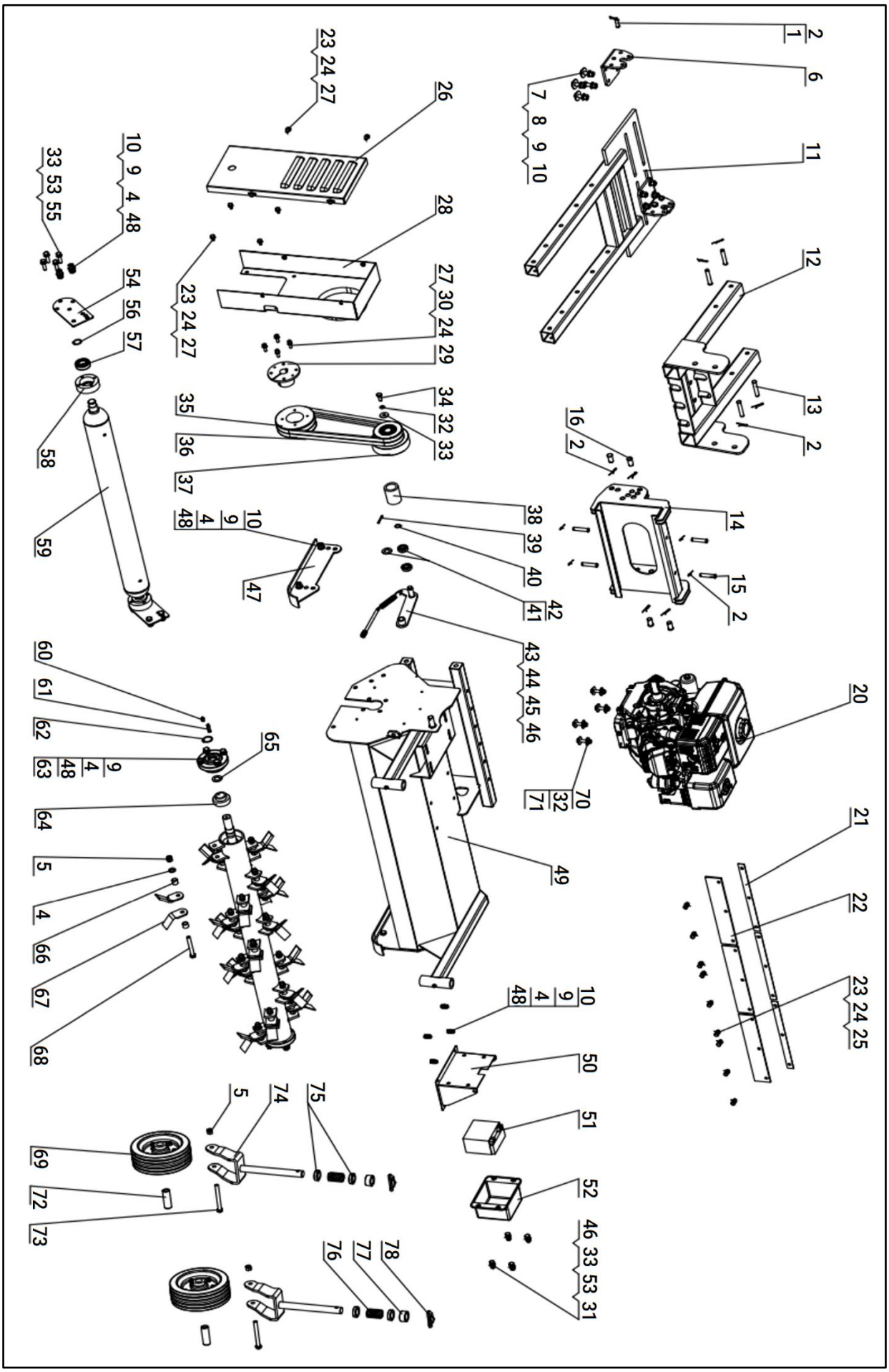

No.	Description	Specification	Qty
1	Pin	Ø10x40	2
2	B-type pin	2x40	14
4	Flat washer	Ø12	44
5	Locking nut	M12	20
6	Mounting plate		2
7	Hex bolt	M12x45	8
8	Large flat washer	Ø12x37	8
9	Spring washer	Ø12	24
10	Nut	M12	16
11	Frame weldment		1
12	Sub-frame weldment		1
13	B-type pin	Ø12x80	4
14	Hanger bracket		1
15	Hex bolt	M12x70	4
16	Hex bolt	M16x50	4
20	Engine		1
21	Baffle retaining strip		3
22	Baffle		3
23	Hex bolt	M8x20	17
24	Flat washer	Ø8	21
25	Locking nut	M8	9
26	Belt cover		1
27	Spring washer	Ø8	12
28	Belt inner plate		1
29	Taper sleeve		1
30	Socket head cap screw	M8x25	4
31	Hex bolt	M10x25	4
32	Large flat washer	Ø10x30	9
33	Spring washer	Ø10	13
34	Clutch bolt		1
35	Driven pulley		1
36	Belt		2
37	Clutch		1
38	Tension pulley		1
39	Cotter pin	4x32	1
40	External circlip	17	1
41	Bearing	6003	2
42	Flat washer	Ø18	1
43	Bracket weldment		1
44	Tension spring		1
45	Threaded rod		1
46	Nut	M10	6

No.	Description	Specification	Qty
47	Skid		2
48	Hex bolt	M12x30	16
49	Hood weldment		1
50	Battery box		1
51	Battery		1
52	Battery cover		1
53	Flat washer	Ø10	12
54	Press roller baffle		2
55	Hex bolt	M10x40	8
56	External circlip	25	2
57	Bearing	6205	2
58	Press roller seat		2
59	Press roller weldment		1
60	Grease nipple	M10	1
61	A-type key	8x45	1
62	External circlip	30	1
63	Bearing housing	206	1
64	Spherical insert bearing	206	1
65	Seal ring	B50	1
66	Sleeve		40
67	Cutting blade		40
68	Hex bolt	M12x90	20
69	Roller assembly		2
70	Hex bolt	M10x45	4
71	Locking nut	M10	4

WARRANTY INFORMATION:
Please refer to our website for detailed warranty conditions and coverage.
For the most up-to-date and comprehensive warranty information, visit **www.tmgindustrial.com**