TMG INDUSTRIAL®

TMG-GFM28

PRODUCTMANUAL

v.2026.06.05

Stubble Mower



⚠ WARNING



Please read and understand the product manual completely before assembly

- Check the parts list to make sure all parts are received.
- Wear safety goggles or other protective gear while assembling.
- Do not return products to dealers, who are not equipped to handle returns.

Missing parts or have questions on assembly?
Email: cs@tmgindustrial.com
Or visit: tmgindustrial.com

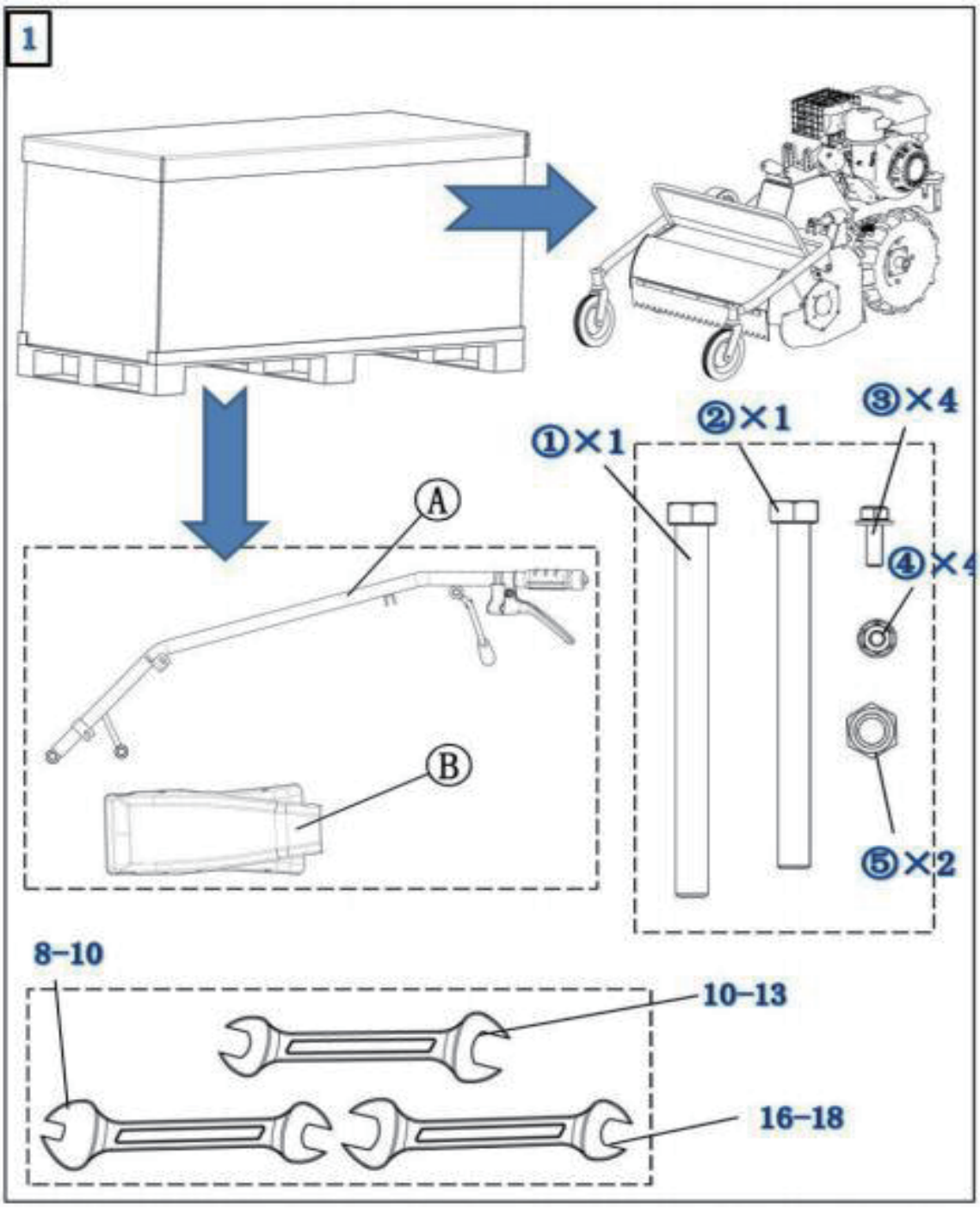
1
①×1
②×1
③×4
④×4
⑤×2
A
B
8–10
10–13
16–18

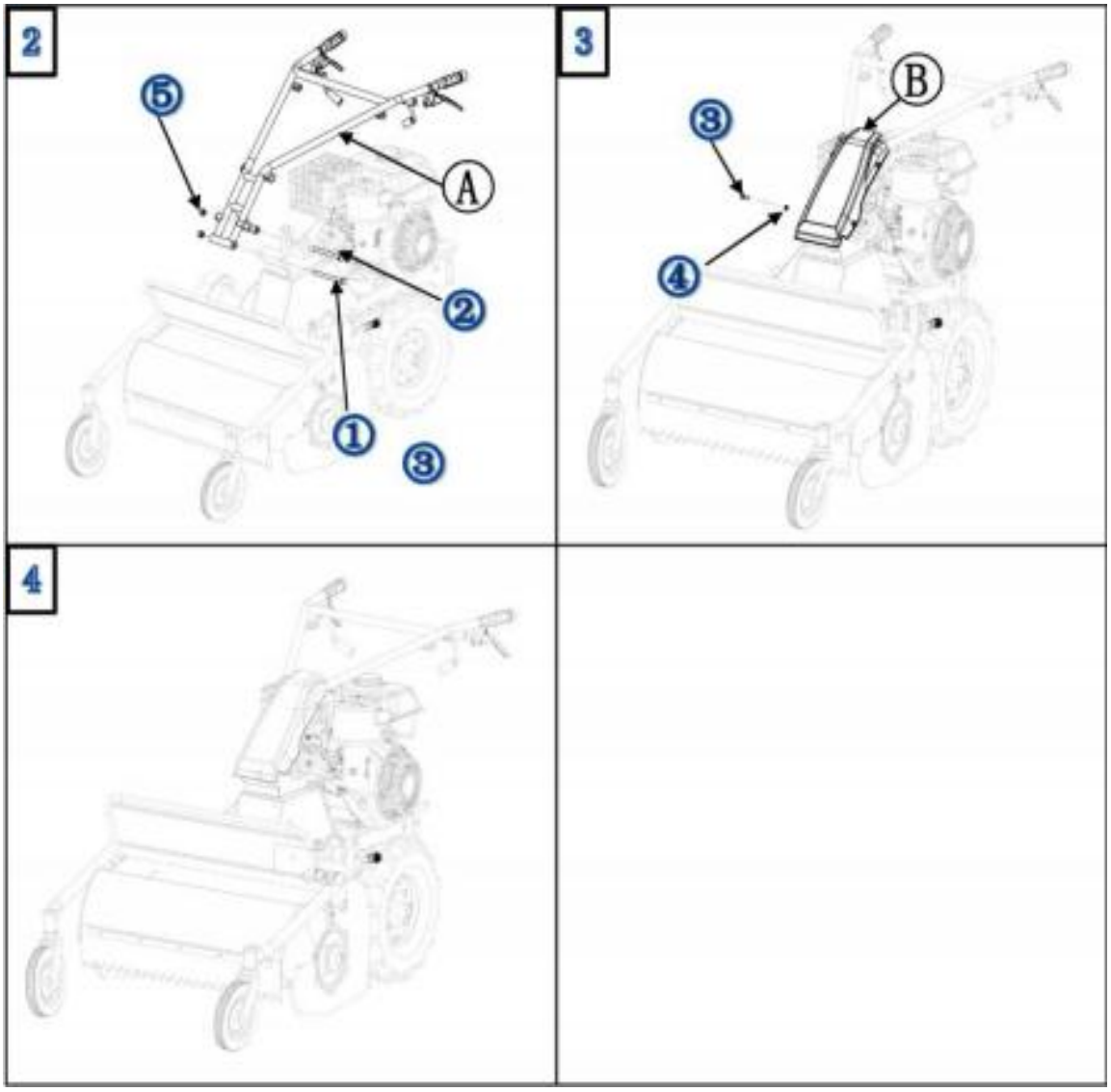
2
5
A
2
1
3
3
B
3
4
4

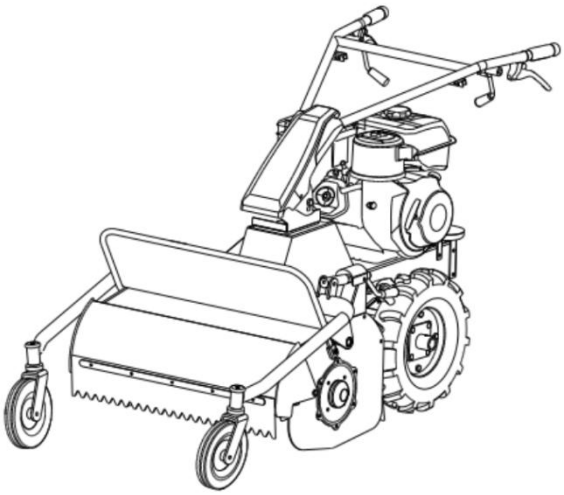

safety information

The safety of you and others is very important. We provide important safety information both in the instruction manual and in the machine.

Please read it carefully.

Safety information warns you of potential dangers that may harm you and others. Each piece of safety information is indicated by safety signs with safety quotations: danger, warning, and attention.

- Please pay special attention to the statement in the above quotation:

Hazards:	If you do not follow the instructions, it will cause serious injury or even death.
Warning	Failure to follow the instructions may result in equipment damage and casualties.
: Note:	If you do not follow the instructions, it may cause damage to equipment and personnel.

Damage prevention information!

You can also see that other important information is indicated by "attention"
Failure to follow the instructions may cause damage to the equipment.

Note

Safety precautions



If the stubble mower is operated according to the instructions, it can run safely and reliably according to the design. Please read and understand this manual carefully before operating the Stubble Mower, otherwise it may

cause personal injury or equipment damage.

---

safety matters

o When the engine starts, the clutch handle is released, and the output switch is ON.

● Please pay attention to safety when the machine works!

Be careful of hurting people with rotary tillage knives and weeding wheels!

OThe fuel must be strictly of the specified brand and must be clean!

• When the machine stops farming, it is necessary to press the fame out switch "OFF" to keep the

machine in a static state.

O Gasoline is flammable and must be refueled.

◇ Due to the continuous improvement of models, photos and illustrations in the book, they may be different from real objects.

Table of contents

The first chapter, safety precautions and warnings	7
◆1. Training	7
◆2. prepare	7
◆3. Manipulation	7
◆4. Maintenance and storage	8
chapter IIposition andQuantity of safetywarning signs posted on Machines	9
◆1. safetywarning signs	9
◆2. paste position ofsafitywarning signs	9
Chapter IIIMain Technical Specifications and Supporting Requirements	10
1. Main Technical spec if cations	10
◆2. Supporting Requirements	10
◆3. Schematic Diagram of Structure	11
The Fourth chapter operating instructions	12
◆1. Daily Inspection	12
◆2. startup steps	14
◆3. Height adjustment of the cutter part	15
◆4. Precautions for Long-Term storage	15
chapter v scope of application	16
chaptervIcommon Faults and Troubleshooting Methods	16
◆ 1. Engine Faults and Troubleshooting Methods	16
◆2. Clutch Failures and Troubleshooting Methods	16
◆3. Failure and Troubleshooting of Transmission BOX	16
chapter vII List of wearable parts	17

chapter1 safetyprecautionsAndwarnings

1.Training

a) Read the operation and maintenance instructions carefully, fully familiar with all operating mechanism and the correct use of machines. Master how to stop and quickly separate the operating mechanism.
b) Children are never allowed to use the machine. Never allow adults who have not read the instructions to use the machine.
c) keep the work area empty, especially children and pets.

*2. Prepare

a) Thoroughly inspect the area where the machine will be used and remove all sundries.
b) Before starting the engine (motor), disengage all clutches and put them in neutral.
c) Don't operate the machine without proper clothing. Wearing non-slip shoes will improve the stability of your foothold on slippery surfaces.
d) Handle the fuel carefully; it is flammable.

1) Use appropriate containers to store fuel oil.
2) When the engine is running or warm-up, it is forbidden to add fuel to the fuel tank and lubricate oil into the box.
3) Refueling should be done very carefully outdoors, not indoors.
4) Before starting, tighten the fuel tank cover to wipe off the spilled fuel.

e) When the engine is running, no adjustment shall be made (except special adjustment recommended by the manufacturer).
f) Safety glasses should be worn during any operation, such as preparation, operation, and maintenance.

3.Manipulation

a) Hands and feet shall not approach rotating parts, move back-and-forth parts, or put them under rotating parts.

b) Be especially careful when operating on (or passing through) gravel roads, sidewalks, or highways, be alert to potential dangers, and pay attention to traffic conditions, and do not carry passengers.

c) After hitting sundries, stop the engine and comprehensively check whether the machine is damaged. If damaged, restart and operate the machine only after repair.

d) Pay attention to your feet at the beginning to avoid slipping or falling

e) In case of abnormal vibration of the machine, stop the engine immediately to find the cause, because vibration is usually the precursor of failure.

f)stop the engine when leaving the operating position,before clearing the blockage ofthe blade, and during maintenance, adjustmentor inspection.

g)when themachine is in an unmanned state, all possible preventive measures should be taken: separating the power take-off shaft, lowering the additional devices, putting in neutral, and stopping the engine.

h)Before cleaning, repairing or inspecting the machine, the engine should be turned off and all moving parts should be confirmed tobe ina stopped state.

i)The exhaust gas from the engine is harmful, so do not run indoors.

j)DO not operate the grass chopper without proper protective devices,protective covers or other protective devices.

k)keep away from children and pets. 1)Don'toverload the machine due to large cutting width and high speed.

m) The machine s hall not run a thigh speed onslippery roads. watch the back andbe careful when going backwards.

n)Never allow bystanders to approach the machine.

o)only additional devices and equipment allowed by the manufacturer (such as wheel counterweight, counterweight, cab, etc.) can be used.

p)when the visual field or light is not good, do notoperate the grass chopper.

q)Be careful when harvesting on hard ground. The blade may hook into the ground and pull the grass chopper forward. If this happens, letgoofthe handrail and dontcontrol the machine.

r)Don't work on steep slopes.

s)when the stubbleMower goes downhill, it should be prevented from tipping over.

*4. Maintenance and storage a)keep the machine, additional devices andequipment in safeworking condition.

b)check whether the shear bolts, engine fixing bolts and other bolts are properly tightened at regular intervals to ensure that the machine is in safe working condition.

c)The machine should be stored indoors and away from the fire source. The engine should be cooled before the machine is stored indoors.

d)If the stubble Mower needs tobe stored for a longtime, the user's manual should always be kept as important information.

e)DO not repair the machine at will unless you have suitable tools and instructions for disassembling, assembling and repairing the machine.

Chapter II Position and Quantity of Safety Warning Signs Posted on Machines

◆1.Safety warning signs should be kept clear and visible because they involve personal injury.

◆2. Post it according to the position shown below before continuing to use the Stubble Mower.

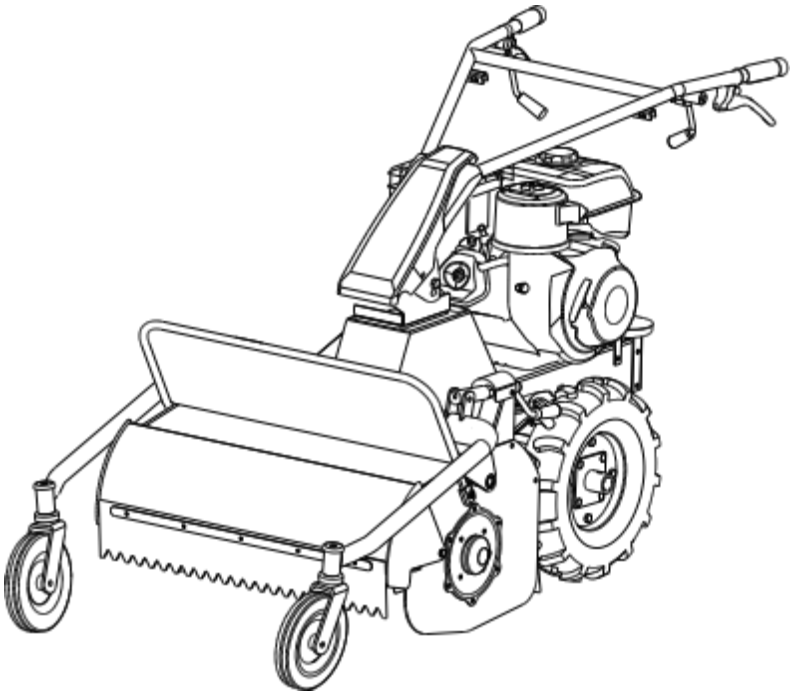

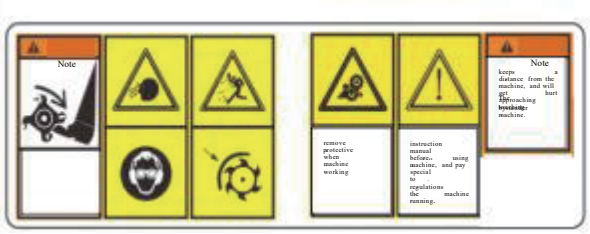

Attach one fender and two fenders

Chapter III Main Technical Specifications and Configuration Requirements

◆1.Main technical specifications: Project design value specification model WMX663 stubble mower structure type pre-matching

Projects		Design value
Specification model		X663 Stubble Mower
Structural style		
Matching engine	Model name	W300F-2 gasoline engine
	The rated power (Kw)	**6.3**
	The rated speed (r/min)	3600
	The startup mode is reversed	Rush-type manual-start Stubble Mower
Stubble Mower	External dimensions	l800x800x800mm
	Mass of structure (Kg)	180
	Transmission mode	Gear + belt drive
	Clutch mode	Belt tension clutch
	Gear position	3 before 1 fall
	Stubble height (mm)	≥**5**
	Width (mm)	**690**
	Operation speed (m/s)	0. 1~0.3
	Hourly productivity (mu/hour)	≥4
	Oil consumption (kg/hm^2)	≤35
	Number of standard flail knives (pieces)	36

Table I

※ The above specifications may be changed due to improvement, which is only for reference and not for acceptance.

2. Supporting requirements:

Power: W300F-2 gasoline engine, pull plate anti-winding device, oil bath air filter.

◆ 2.Schematic diagram of structure:

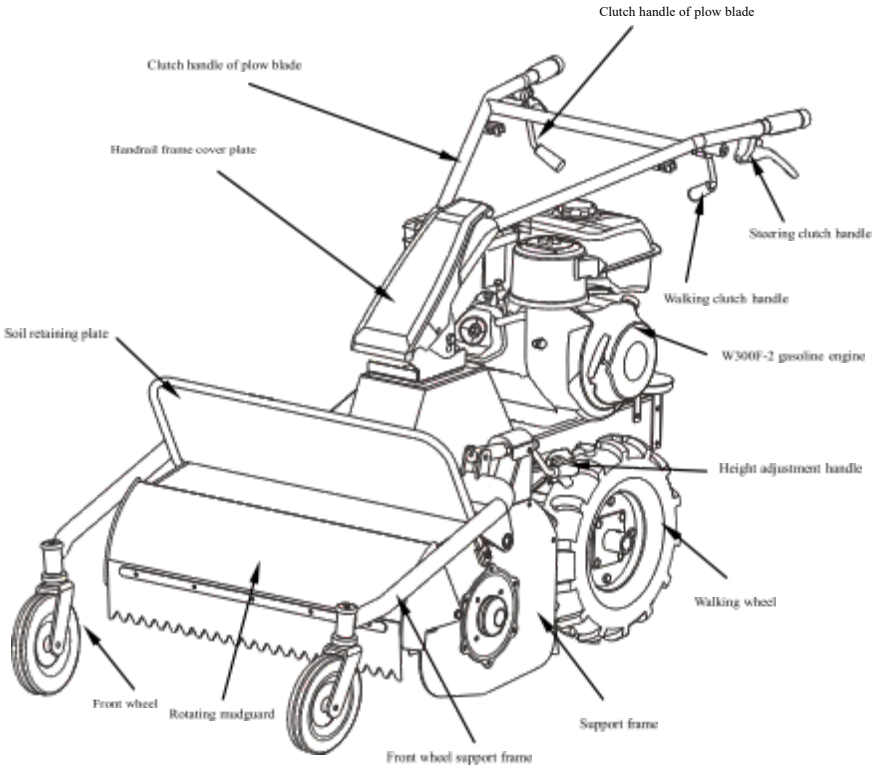

Chapter IV Operating Instructions

When the Stubble Mower leaves the factory, the factory has made routine adjustments, but before using the machine, users should check and adjust all the institutions so that the Stubble Mower can be used better.

- 1.Daily inspection

◇ 1 Check the engine oil

Note

The normal refueling volume of engine oil is 1.1L When the oil level is lower than the normal state, using the engine will cause serious damage to the engine!

- Place the engine in a horizontal position.
- Unscrew the engine oil dipstick and wipe it clean.
- Insert the oil dipstick into the oil filling hole (do not tu m it).
- Take out the oil dipstick and check the oil level. It is normal if the oil level is within the range indicated by the oil dipstick.

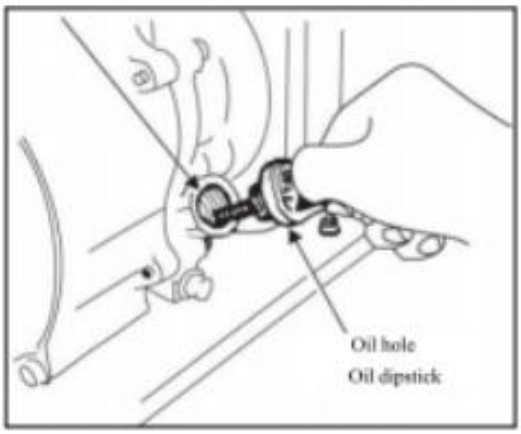

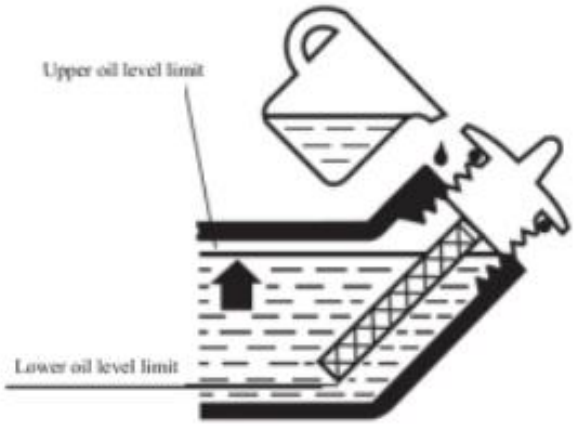

Warning-SAE10W-30 is a recommended general engine lubricating oil at common temperatures, and other viscosity lubricating oils can be used when the average temperature in your region is within the range shown in the chart.

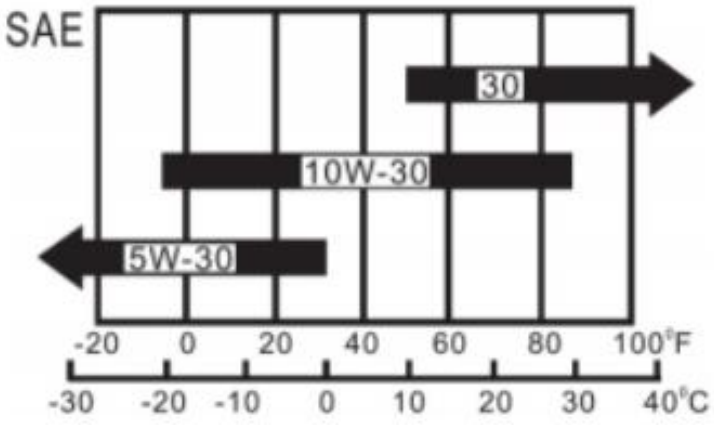

◇1.2 check the transmission case oil

●Place the Stubble Mower on the horizontal ground and unscrew the oil injection bolt with a wrench.

● The normal oil filling amount is 1.6L, and the normal oil level is at the lower edge of the oil filling hole. If the oil level is too low, add oil to the normal oil level.

●The recommended oil grade is SAE10W-30.

◇1.3 check the air filter

When using it for the first time, take off the air filter cover and fill the oil to the oil level.

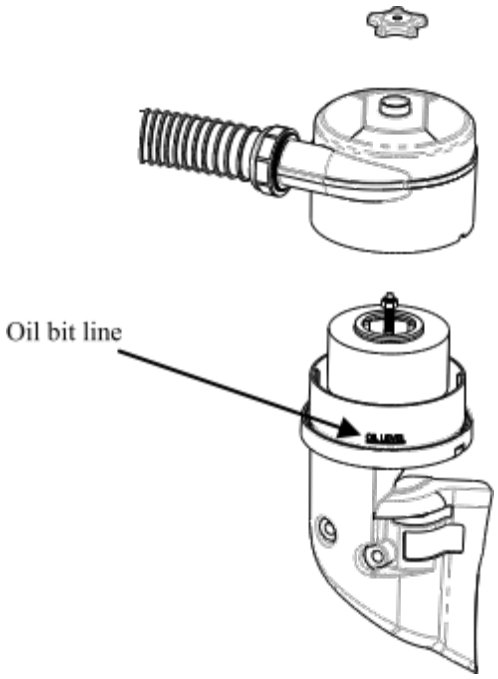

Note

A dirty air filter will restrict air from flowing into the carburetor, which will degrade engine performance.

Never run the engine without air filter, otherwise it will accelerate the wear of the engine.

Check the air filter element to ensure it is clean and intact. Clean or replace if necessary

◆ 2.Startup steps

◇1.1 Turn the fuel valve to the "ON" position

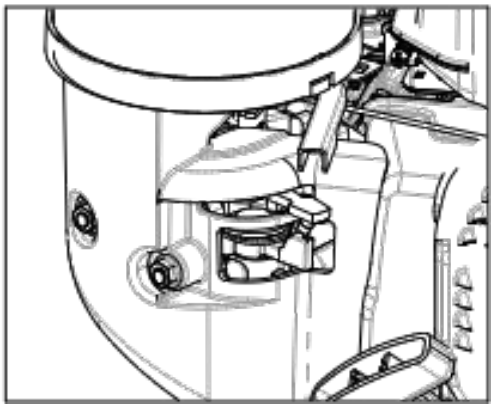

◇1.2Turn the choke lever to the "CLOSE" position

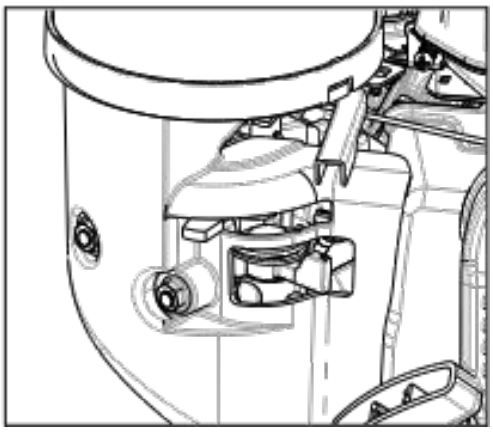

◇1.3Put the remote throttle switch

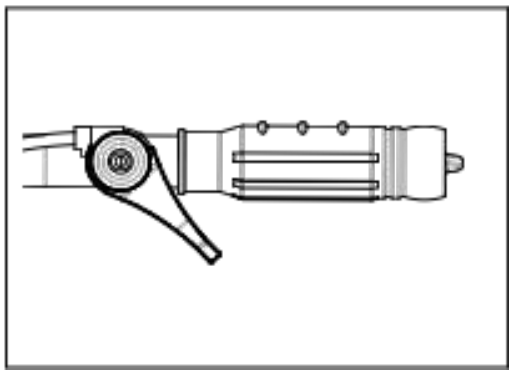

•3.Height adjustment of cutter part

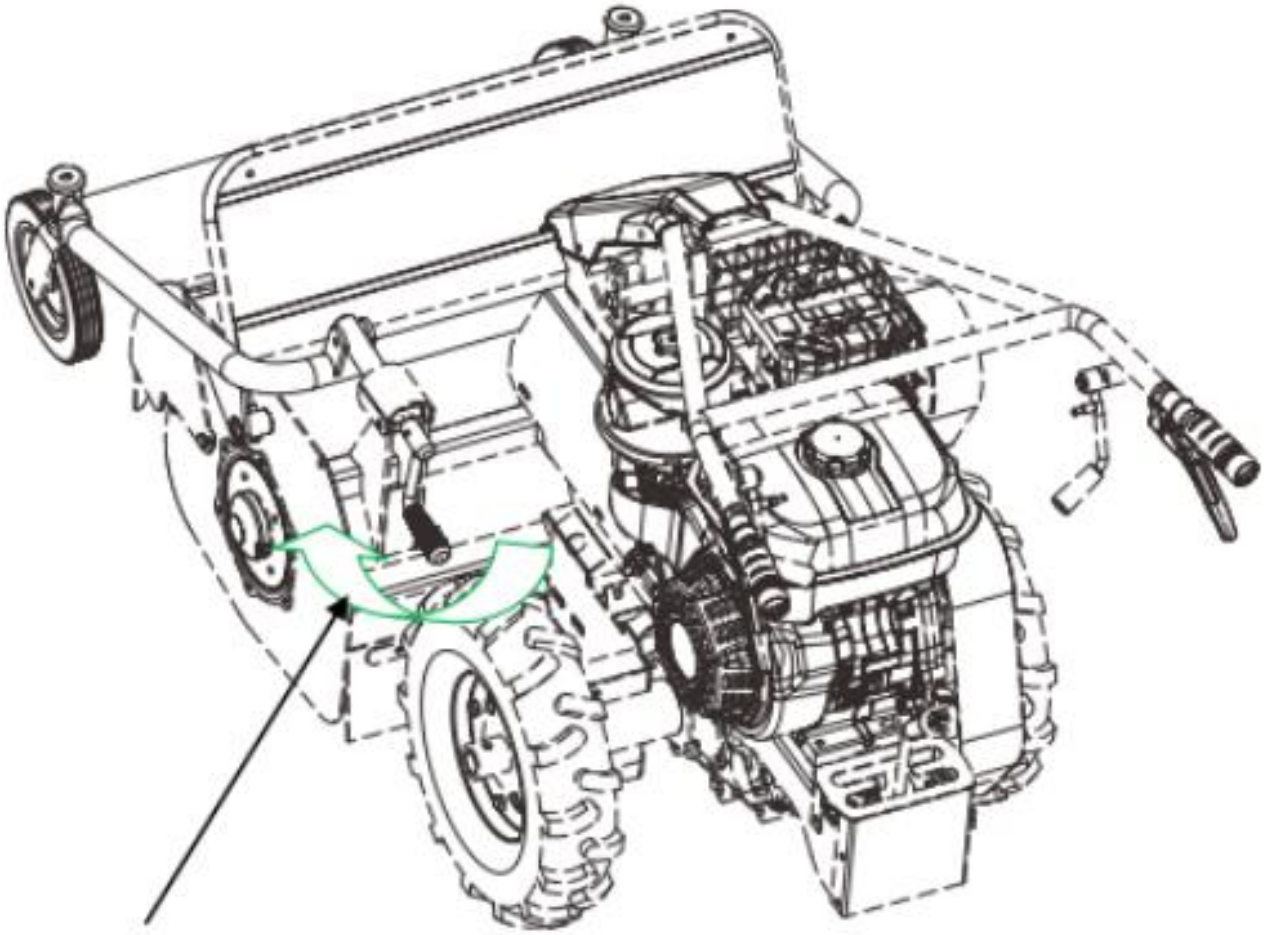

Rotate the height adjustment handle to adjust the clearance between the blade and the ground

When using the machine, the clearance between the cutter and the ground should be properly adjusted according to the thickness and compactness of crops, and the forward speed should be appropriate according to crops.

•4.Precautions for long- term storage

In case of long-term storage, in order to prevent corrosion, the following measures should be taken:

(1) Clean the dust and dirt on the exterior;

(2) Drain the lubricating oil in the transmission case and inject new lubricating oil;

(3) Apply anti-rust oil on the unpainted surface;

(4) Store the machine in a ventilated, dry and safe place indoors.

Chapter V Scope of Application

This machine is suitable for weeding in vegetable fields, flowers, orchards and overgrown wasteland, and can realize the effects of organic circulation, moisture retention and yield increase. The cutter head adopts hanging flail knife, which has the functions of cutting grass and breaking Stubble, and can meet the weeding operation in complex terrain with overgrown weeds and thorns, and is safe and reliable.

This machine is suitable for cultivated land with a slope less than 5°. If the slope is greater than this, it may cause the machine to overturn, and in serious cases, it may cause personal injury.

Chapter VI Common Faults and Troubleshooting Methods

◆1.Engine faults and troubleshooting methods

See gasoline engine for details of starting faults and troubleshooting of gasoline engine

◆2.Clutch failures and troubleshooting methods

Phenomenon	Reason	Exclusion method
Can't clutch	Clutch handle	Repair or replace
	Clutch cable damaged	Replace
	The belt is damaged	Replace
	Improper adjustment of clutch cable	Re-adjust clutch cable

◆3.Failure and troubleshooting of transmission box

Phenomenon	Reason	Exclusion method.
Excessive gear noise	The shaft is deformed and bent	Replace shaft
	Dealing with excessive wear side risks and out of tolerance	Replace gears
	The fit between shaft and box body is too loose	Replace shaft or bearing
Output shaft oil leakage	Excessive wear of output bearing hole position	Replace the output shaft or bearing
	Failure of oil seal on output shaft	Replace oil seal
Oil leakage of box body	The box body is provided with hidden micro loose holes	Repair welding or primer to repair leakage
Oil leakage at oil drain hole	The gasket is damaged here	Replace the gasket
	Loose bolts	The Turning

Chapter V List of wearable parts

No	part name.	specifications	Remarks
1	Flashing blade		Farming parts
2	Belt		drive disk assembly
3	clutch cable		control unit
4	steering cable		control unit
5	Throttle cable		control unit
6	clutch tensioning handle		control unit
7	steering clutch handle		control unit
8	Damping grip		
9	Bearing		
10	oil seal		
11	Gasket		
12	Mud retaining rubber		Farming parts
13	oilplug		

WARRANTY INFORMATION:

Please refer to our website for detailed warranty conditions and coverage.

For the most up-to-date and comprehensive warranty information, visit **www.tmgindustrial.com**